CAUTION
PLEASE CONTACT CURRY SUPPLY COMPANY BEFORE ATTEMPTING ANY CHANGES TO THE ELECTRICAL SYSTEMS. DOING SO MAY CAUSE EQUIPMENT DAMAGE OR VOID WARRANTY.

Table of Contents

2187-1004 Water Truck Harness WD Sheet 1 of 5 3
2187-1004 Water Truck Harness WD Sheet 2 of 5 4
2187-1004 Water Truck Harness WD Sheet 3 of 5 5
2187-1004 Water Truck Harness Sheet 4 of 5 6
2187-1004 Water Truck Harness Sheet 5 of 5 7
1815-1000 Water Tank 4K Gen IV Parts Sheet 1 of 5 8
1815-1000 Water Tank 4K Gen IV Air Line Diagram Sheet 2 of 5 9
1815-1000 Water Tank 4K Gen IV Bolt List Sheet 3 of 5 10
1815-1000 Water Tank 4K Gen IV Shipping Dimensions Sheet 4 of 5 11
2187-1073 25 Mack MD PTO Wiring 2K Allison WO Park Brake SW Sheet 1 of 2 12
2187-1073 25 Mack MD PTO Wiring 2K Allison WO Park Brake SW Sheet 2 of 2 13
2187-1074 25 Mack PTO Wiring 2K Allison W Park Brake SW 14
Ford 2 on 2 Compressor Layout 15
Elkhart Nitro Connector Pin Diagram 16
Elkhart Harness Module Monitor 15FT 37522000 17
Elkhart Nitro HD Joystick Electric 41067000 18
Elkhart Nitro HD Position Sensor Testing Info 8100HD 19
Hatz Remote Engine 3H50T Actuator Locations 20
Hatz Remote Engine 3H50T Sensor Locations Sheet 1 of 3 21
Hatz Remote Engine 3H50T Sensor Locations Sheet 2 of 3 22
Hatz Remote Engine 3H50T Sensore Locations Sheet 3 of 3 23
Hatz Remote Engine Wiring Diagram Sheet 1 of 6 24
Hatz Remote Engine Wiring Diagram Sheet 2 of 6 25
Hatz Remote Engine Wiring Diagram Sheet 3 of 6 26
Hatz Remote Engine Wiring Diagram Sheet 4 of 6 27
Hatz Remote Engine Wiring Diagram Sheet 5 of 6 28
Hatz Remote Engine Wiring Diagram Sheet 6 of 6 29

NOTES:
REFERENCE DOCUMENT:
-BUILD CABLE HARNESS IN ACCORDENCE WITH IPC-620

1. SPLICING WIRES SHALL BE DONE AN 1-1/2 BEFORE BREAKING OUT THE HARNESS

2. ITEM NO. 5-10,12,13 NOT SHOWN IN ASSEMBLY

3. ALTERNATE PART NO. ARE ALLOWED ASLONG AS THE ALTERNATE PART PROVIDES THE SAME FORM FIT AND FUNCTION. IF UNSURE PLEASE CONTACT CURRY SUPPLY ENGINEERING

4. PLACE LABELS WITH THE FOLLOWING CALLOUTS THAT POINTS TO EACH COMPONENT

5. FOLLOW GUIDLINES/RECOMMENDATION OF MANUFACTURE WHEN INSTALLING EACH PLUG, JACK, SPLICE, CONNECTOR, AND TERMINAL

6. SHRINK ITEM NO. 10 OVER TOP EACH SPLICE THAT IS MADE

7. WRAP ITEM NO. 9 AROUND EACH LOCATION

8. WIRE STUFF SP4,SP5 WITH 1 EXTRA 14AWG ONCE THE SPLICE HAS BEEN CRIMPED TRIM EXCESS WIRE FLUSH

ELECTRICAL TAPE CALLOUT SYMBOL

SPLICE CALLOUT SYMBOL (SP#)

Item No.	QTY.	Part No.	Stock Desc.	Units
1	2	ADO-PT1937	Connector 5-way 5 pin for Chevrolet Tail Light GM	ea
2	10	0747509	.157", 16-14 AWG, FEMALE BULLET CONNECTOR	ea
3	265	0708152	3/8" POLYETHYLENE SLIT WIRE LOOM	in
4	310	0708151	1/4" POLYETHYLENE SLIT WIRE LOOM	in
5	140	0700457	14 GAUGE RED	in
6	125	0719096	14 GAUGE GREEN	in
7	775	0700458	14 GAUGE WHITE	in
8	745	5121819	14 GAGUE BROWN	in
9	1	76455A22	Electrical Tape, 3M Scotch Super 33+, 3/4" Wide, 76 Feet Long, Black	ea
10	5	0749243	FASTENAL 8AWG-6AWG SHRINK TUBE W/ ADHESIVE 2" LONG	ea
11	2	58604	16-14 AWG Power Phase® #10 Stud Blue Polyolefin Sealed Crimp Ring Terminal	ea
12	3	34318	TE CONNECT PARALLEL SPLICES 8AWG	ea
13	2	34319	TE CONNECT PARALLEL SPLICES 6AWG	ea

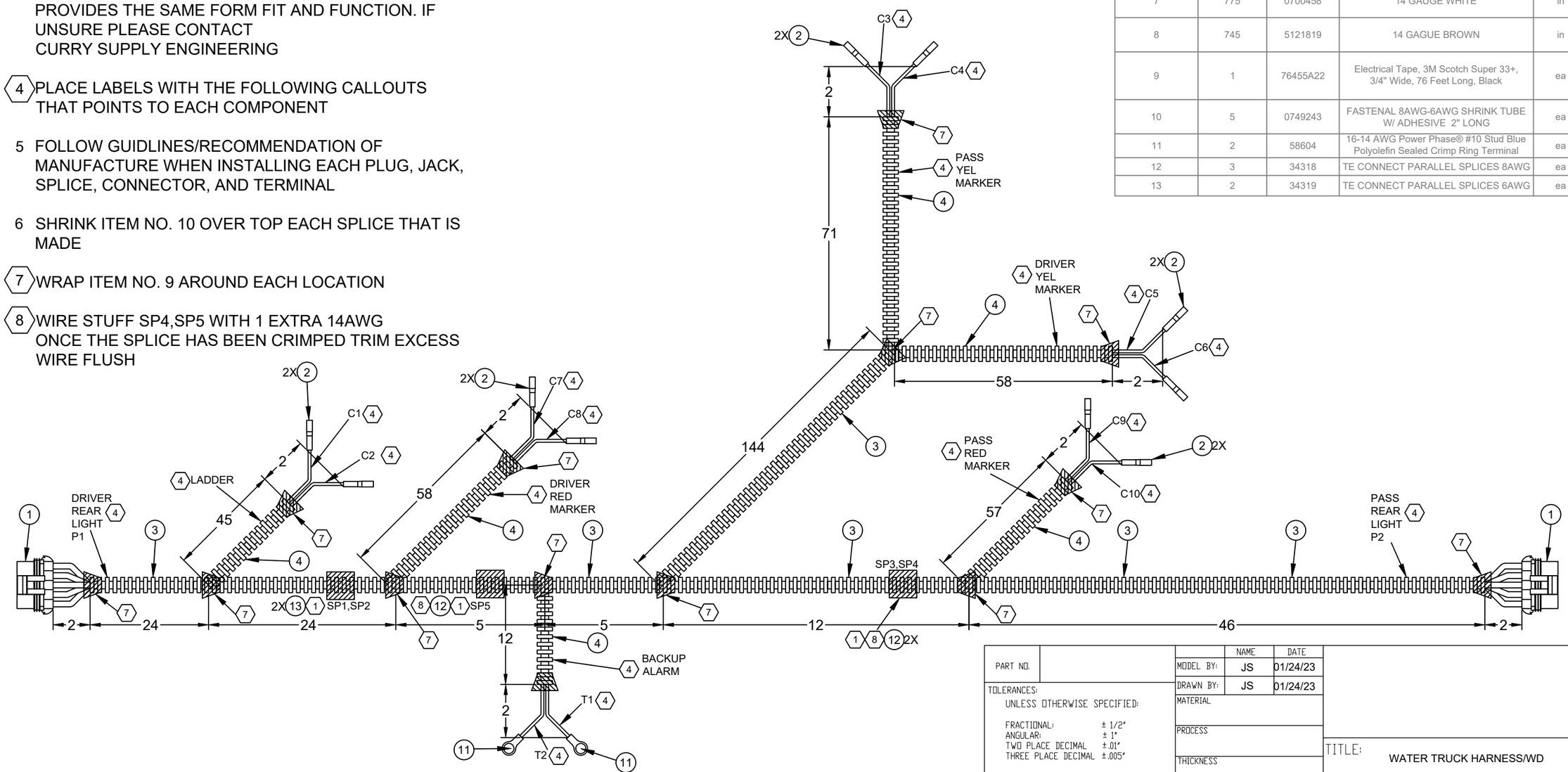

		NAME	DATE
PART NO.		MODEL BY:	JS 01/24/23
TOLERANCES: UNLESS OTHERWISE SPECIFIED: FRACTIONAL: ± 1/2" ANGULAR: ± 1° TWO PLACE DECIMAL ±.01" THREE PLACE DECIMAL ±.005"		DRAWN BY:	JS 01/24/23
		MATERIAL	
		PROCESS	
		THICKNESS	
PROPRIETARY AND CONFIDENTIAL THE INFORMATION CONTAINED IN THIS DRAWING IS THE SOLE PROPERTY OF CURRY SUPPLY COMPANY. ANY REPRODUCTION IN PART OR AS A WHOLE WITHOUT THE WRITTEN PERMISSION OF CURRY SUPPLY COMPANY IS PROHIBITED.		UNITS	IN
		SCALE	NTS

TITLE: WATER TRUCK HARNESS/WD

SIZE | DRAWING NO. 2187-1004 | REV 0

WEIGHT: | SHEET 1 OF 5

LABEL	DESCRIPTION	LABEL	DESCRIPTION
P1	DRIVER REAR TAIL LIGHT	C5	DRIVER SIDE YELLOW MARKER V-
P2	HARNESS TIE IN	C6	DRIVER SIDE YELLOW MARKER V+
C1	LADDER MARKER LIGHT V-	C7	DRIVER SIDE RED MARKER V-
C2	LADDER MARKER LIGHT V+	C8	DRIVER SIDE RED MARKER V+
C3	PASSENGER SIDE YELLOW MARKER V-	C9	PASSENGER SIDE RED MARKER V-
C4	PASSENGER SIDE YELLOW MARKER V+	C10	PASSENGER SIDE RED MARKER V+

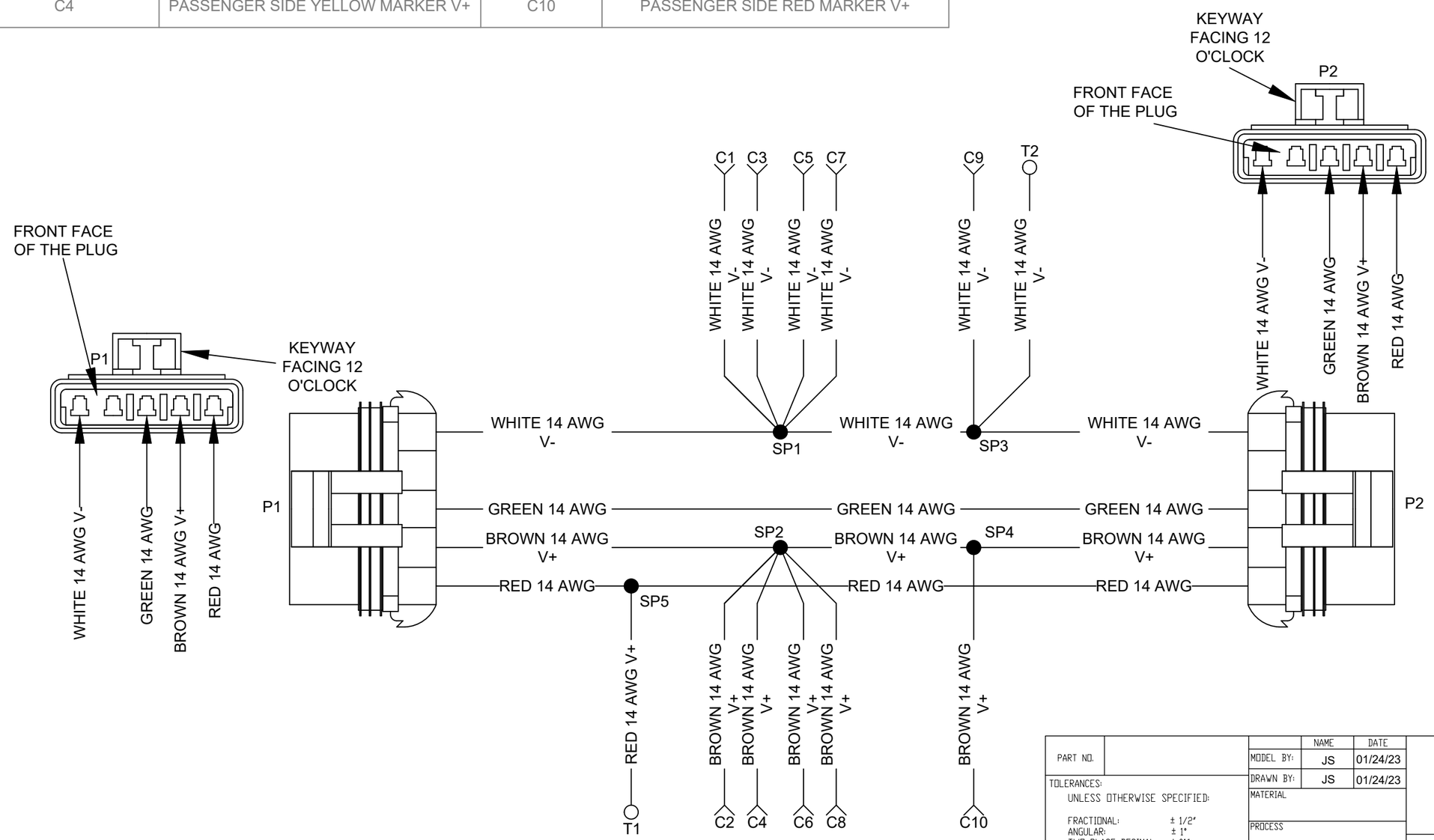

		NAME	DATE
PART NO.	MODEL BY:	JS	01/24/23
	DRAWN BY:	JS	01/24/23

TOLERANCES:
UNLESS OTHERWISE SPECIFIED:

FRACTIONAL: ± 1/2"
ANGULAR: ± 1°
TWO PLACE DECIMAL ±.01"
THREE PLACE DECIMAL ±.005"

MATERIAL
PROCESS
THICKNESS
UNITS: IN
SCALE: NTS

TITLE: WATER TRUCK HARNESS/WD

SIZE | DRAWING NO. 2187-1004 | REV 0

WEIGHT: | SHEET 2 OF 5

PROPRIETARY AND CONFIDENTIAL
THE INFORMATION CONTAINED IN THIS DRAWING IS THE SOLE PROPERTY OF CURRY SUPPLY COMPANY. ANY REPRODUCTION IN PART OR AS A WHOLE WITHOUT THE WRITTEN PERMISSION OF CURRY SUPPLY COMPANY IS PROHIBITED.

PASSENGER SIDE RED MARKER

PASSENGER SIDE YELLOW MARKER

			NAME	DATE
PART NO.		MODEL BY:	JS	01/24/23
TOLERANCES: UNLESS OTHERWISE SPECIFIED: FRACTIONAL: ± 1/2" ANGULAR: ± 1° TWO PLACE DECIMAL ±.01" THREE PLACE DECIMAL ±.005"		DRAWN BY:	JS	01/24/23
		MATERIAL		
		PROCESS		
		THICKNESS		
PROPRIETARY AND CONFIDENTIAL THE INFORMATION CONTAINED IN THIS DRAWING IS THE SOLE PROPERTY OF CURRY SUPPLY COMPANY. ANY REPRODUCTION IN PART OR AS A WHOLE WITHOUT THE WRITTEN PERMISSION OF CURRY SUPPLY COMPANY IS PROHIBITED.		UNITS	IN	
		SCALE	NTS	

TITLE: WATER TRUCK HARNESS/WD

SIZE | DRAWING NO. 2187-1004 | REV 0

WEIGHT: | SHEET 3 OF 5

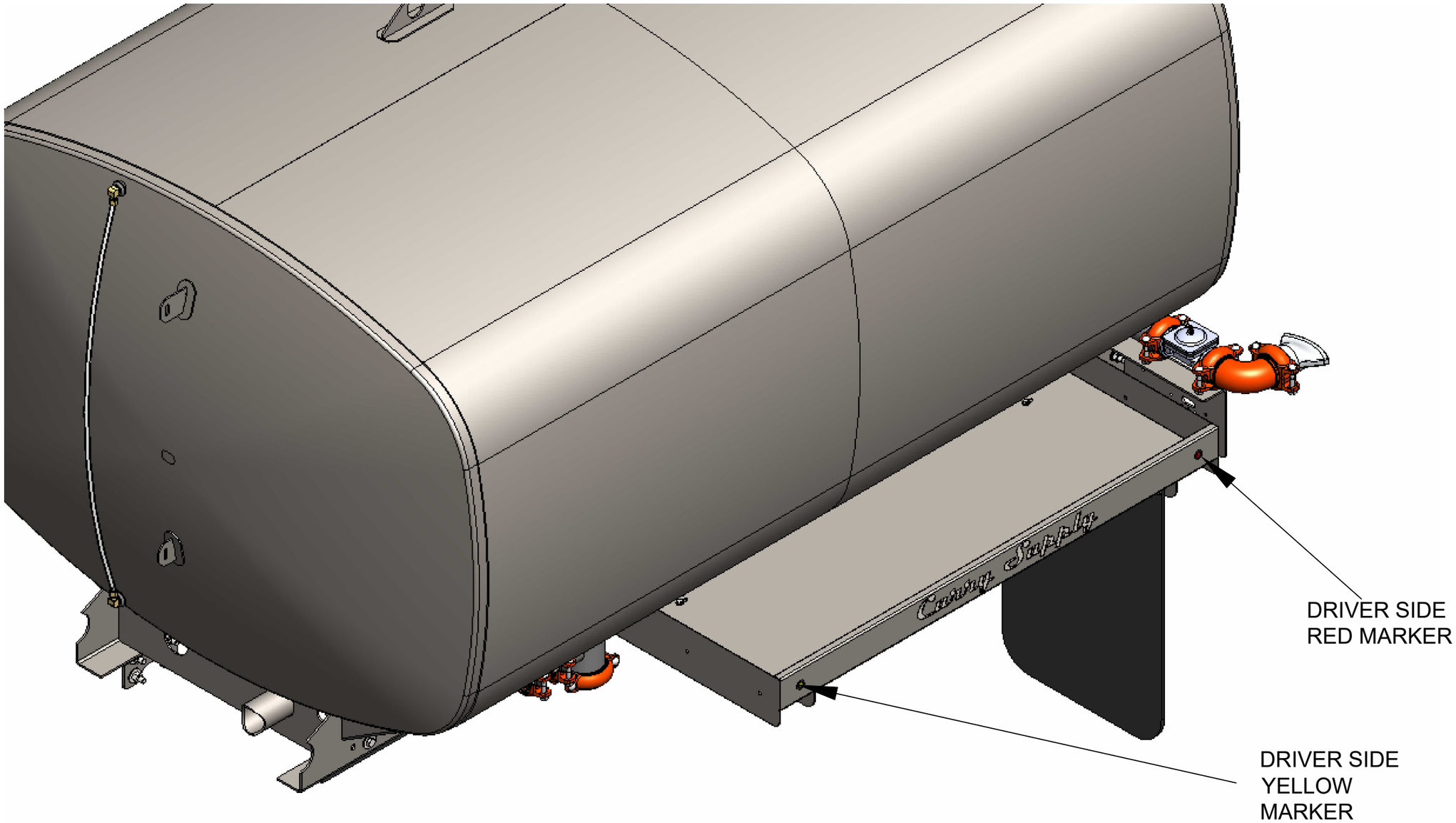

			NAME	DATE
PART NO.		MODEL BY:	JS	01/24/23
		DRAWN BY:	JS	01/24/23

TOLERANCES:
UNLESS OTHERWISE SPECIFIED:

FRACTIONAL: ± 1/2"
ANGULAR: ± 1°
TWO PLACE DECIMAL ±.01"
THREE PLACE DECIMAL ±.005"

MATERIAL

PROCESS

THICKNESS

UNITS IN

SCALE NTS

PROPRIETARY AND CONFIDENTIAL
THE INFORMATION CONTAINED IN THIS DRAWING IS THE SOLE PROPERTY OF CURRY SUPPLY COMPANY. ANY REPRODUCTION IN PART OR AS A WHOLE WITHOUT THE WRITTEN PERMISSION OF CURRY SUPPLY COMPANY IS PROHIBITED.

TITLE: WATER TRUCK HARNESS/WD

SIZE | DRAWING NO. 2187-1004 | REV 0

WEIGHT: | SHEET 4 OF 5

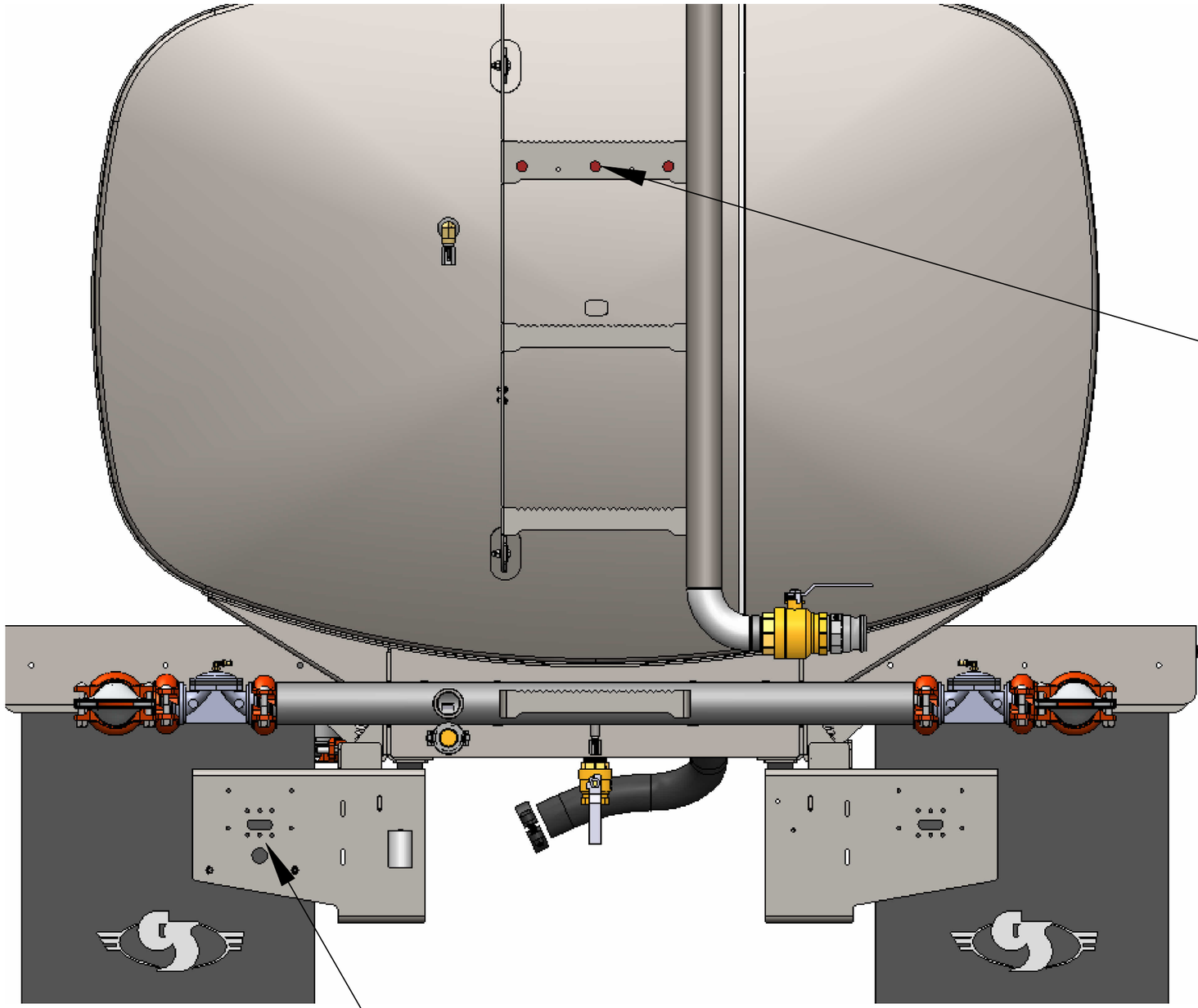

			NAME	DATE
PART NO.		MODEL BY:	JS	01/24/23
		DRAWN BY:	JS	01/24/23

TOLERANCES:
UNLESS OTHERWISE SPECIFIED:

FRACTIONAL: ± 1/2"
ANGULAR: ± 1°
TWO PLACE DECIMAL ±.01"
THREE PLACE DECIMAL ±.005"

MATERIAL

PROCESS

THICKNESS

PROPRIETARY AND CONFIDENTIAL
THE INFORMATION CONTAINED IN THIS DRAWING IS THE SOLE PROPERTY OF CURRY SUPPLY COMPANY. ANY REPRODUCTION IN PART OR AS A WHOLE WITHOUT THE WRITTEN PERMISSION OF CURRY SUPPLY COMPANY IS PROHIBITED.

UNITS IN

SCALE NTS

TITLE: WATER TRUCK HARNESS/WD

SIZE | DRAWING NO. 2187-1004 | REV 0

WEIGHT: | SHEET 5 OF 5

ITEM NO.	QTY	PART NUMBER	DESCRIPTION
1	1	1815-2000	TANK ASSEMBLY, 4,000 GAL.
2	1	1622-1100	ASSEMBLY, SIDE HOSE VALVING, ON ROAD WATER
3	1	1622-1500	ASSEMBLY, CREEK FILL COMPONENTS
4	1	1622-3100	SPRAY ASSEMBLY, BACK LEFT/FRONT RIGHT
5	1	1622-3200	SPRAY ASSEMBLY, BACK RIGHT/FRONT LEFT
6	1	1622-4000	FRONT SPRAY ASSEMBLY
7	1	1622-5000	LADDER/TANK FILL ASSEMBLY
8	1	1622-6000	REEL COMPONENT ASSEMBLY
9	1	1622-8000	ASSEMBLY, SHAFT DRIVE, PUMP MOUNT
10	8	GV-3-CP-RZF-N	CLAMP. 3", ZERO FLEX, VIC STYLE
11	1	MBV-MF-04-04	BALL VALVE, MINI, 1/4"
12	2	CW-0-TL-01	WATER LEVEL INDICATOR, CUT TO FIT
13	1	CW-0-BP-01	HOSE ASSEMBLY, PUMP PRESSURE BY PASS
14	2	B36LC-1	MUDFLAP, 36", RUBBER,
15	1	44605K731	FITTING, PIPE, REDUCER, 3" MP - 1-1/2" FP, CAST STEEL
16	1	HBV150	VALVE, BALL, 1-1/2", BRASS
17	1	1584-0003	NIPPLE, 1-1/2" X 8", THREADED ENDS
18	2	33075Y	LIGHT, 33 SERIES, MINI LED, W/ GROMMET KIT, YELLOW
19	2	33075R	LIGHT, 33 SERIES, MINI LED, W/ GROMMET KIT, YELLOW
20	2	0134296	PLUG, 1/2", HEX, STEEL
21	4	GV-3-CP-F-N	CLAMP, 3", FLEXIBLE, VIC STYLE
22	1	CW-0-3H-01	HOSE, PRESSURE, 3IN, PUMP TO TANK
23	2	GV-90-4	4" VIC ELBOW, 90 DEG
24	6	GV-4-CP-F-N	CLAMP, 4", FLEXBILE, VICTAULIC GROOVED
25	2	GV-4-CP-RZF-N	CLAMP, 4", ZERO FLEX, VICTAULIC GROOVE
26	1	BFV-B-GVNL-4-GY	4' BUTTERFLY VALVE
27	1	GV-TEE-R-4X4X3P	TEE, REDUCING 4'X4"X3", GROOVED
28	1	2404-8-8	FITTING, 1/2" MJ - 1/2" MP, STEEL
29	1	GV-TEE-3STDR-P	TEE, 3", VIC GROOVE, LONG
30	1	BFV-B-GVNL-3-GY	BUTTERFLY VALVE, 3", GROOVED ENDS
31	1	GV-3-2.5-RCP-N	CLAMP, 3" - 2-1/2", REDUCING
32	1	1622-7100	ASSEMBLY, SIDE SPRAY, LH SIDE CONFIGURATION
33	2	GV-CAP-3-STEEL	CAP. 3", VIC CLAMP, STEEL
34	2	BC2178	3" FLUSHER NOZZLE 3/32" X 7" SLOT, GROOVED ALUMINUM
35	2	BC2384	3" SPRAY HEAD 1/4" X 5" SLOT, GROOVED ALUMINUM
36	1	7528-19-21-10.5 LT	REEL, HEAVY DUTY, MANUAL REWIND, 1" - 1-1/2" HOSE
37	2	1164-0003	MUD FLAP BRACKET
38	1	DUMMY-PUMP-NO	PUMP, WATER, COUNTER CLOCKWISE ROTATION, ROPE PACKING
39	120	1485-4-REEL	AIR LINE, 1/2" TUBE, PLASTIC (QTY IN FT)
ITEMS NOT SHOWN			
	1	1622-1300	KIT, SAFETY, WARNING TRIANGLE & FIRE EXT.
	1	WATERTRUCKHOSEKIT	HOSE KIT, CLEAR, 10', MULTI PIECE

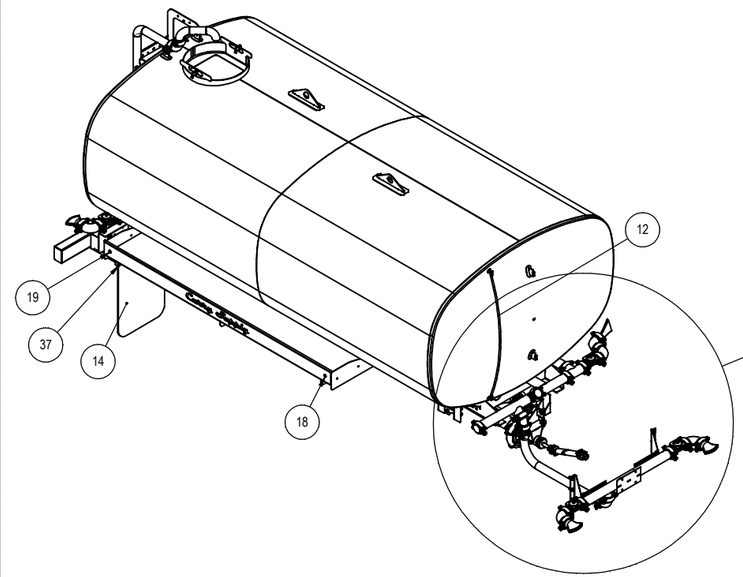

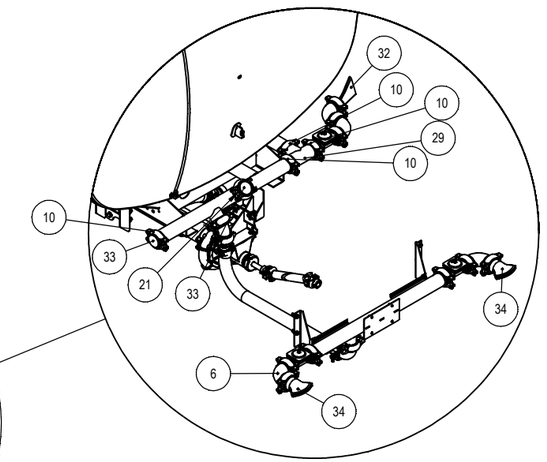

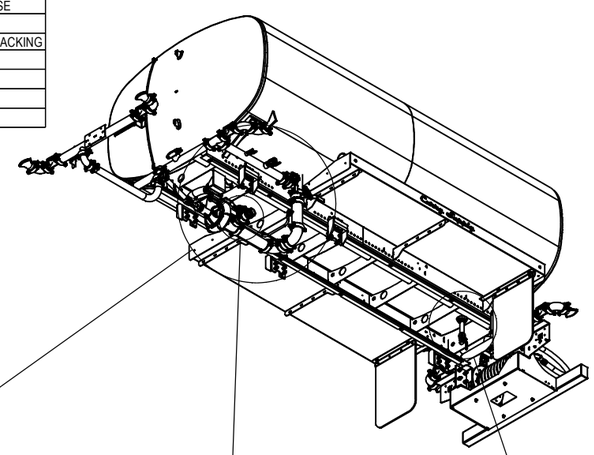

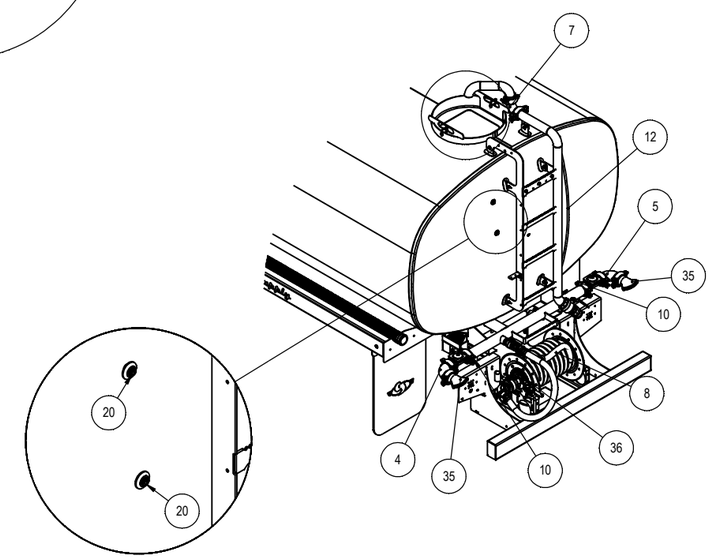

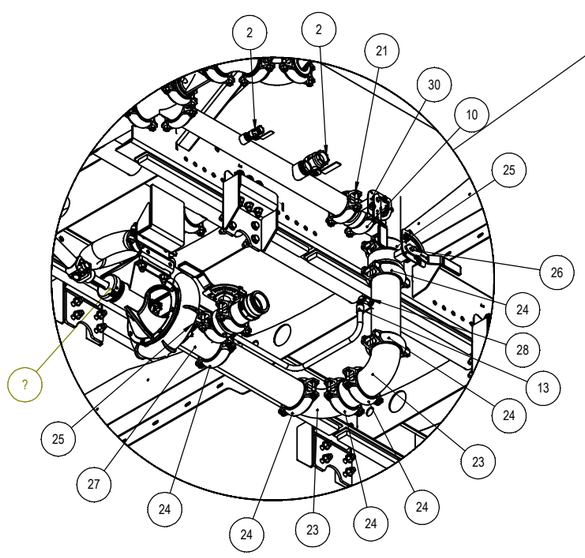

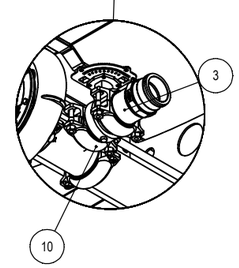

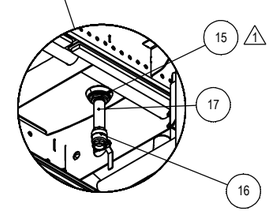

REVISIONS					
ZONE	REV.	DESCRIPTION	DATE	APPROVED	ECR #
B2	1	ADDED 3 TO 1-1/2" ADAPTER FOR REAR DRAIN	06/18/20	MLC	1859

CONTROLLED DOCUMENT

ENGINEER:
DATE:

PROPRIETARY AND CONFIDENTIAL

THE INFORMATION CONTAINED IN THIS DRAWING IS THE SOLE PROPERTY OF CURRY SUPPLY COMPANY. ANY REPRODUCTION IN PART OR AS A WHOLEWITHOUT THE WRITTEN PERMISSION OF CURRY SUPPLY COMPANY IS PROHIBITED.

				NAME	DATE
JOB NUMBER		UNLESS OTHERWISE SPECIFIED:	MODEL BY:	MLC	09/17/19
DRAWING NO.		DIMENSIONS ARE IN INCHES TOLERANCES: FRACTIONAL ±1/8" ANGULAR: MACH ± BEND ±1 TWO PLACE DECIMAL ±.01 THREE PLACE DECIMAL ±.005	DRAWN BY:	MLC	09/17/19
QUANTITY			ENG APPR.		
CUSTOMER			MFG APPR.		
DESIGN STATUS		INTERPRET GEOMETRIC TOLERANCING PER:	Q.A.		
THICKNESS		MATERIAL ASM	COMMENTS:		
UNITS	in	Process A			
APPLICATION					

Curry Supply Co

TITLE: WATER TANK, 4,000 GAL. GEN IV - PARTS

SIZE	PART NO.	REV
C	1815-1000	0

SCALE: 1:96 WEIGHT: 5727.9532 SHEET 1 OF 5

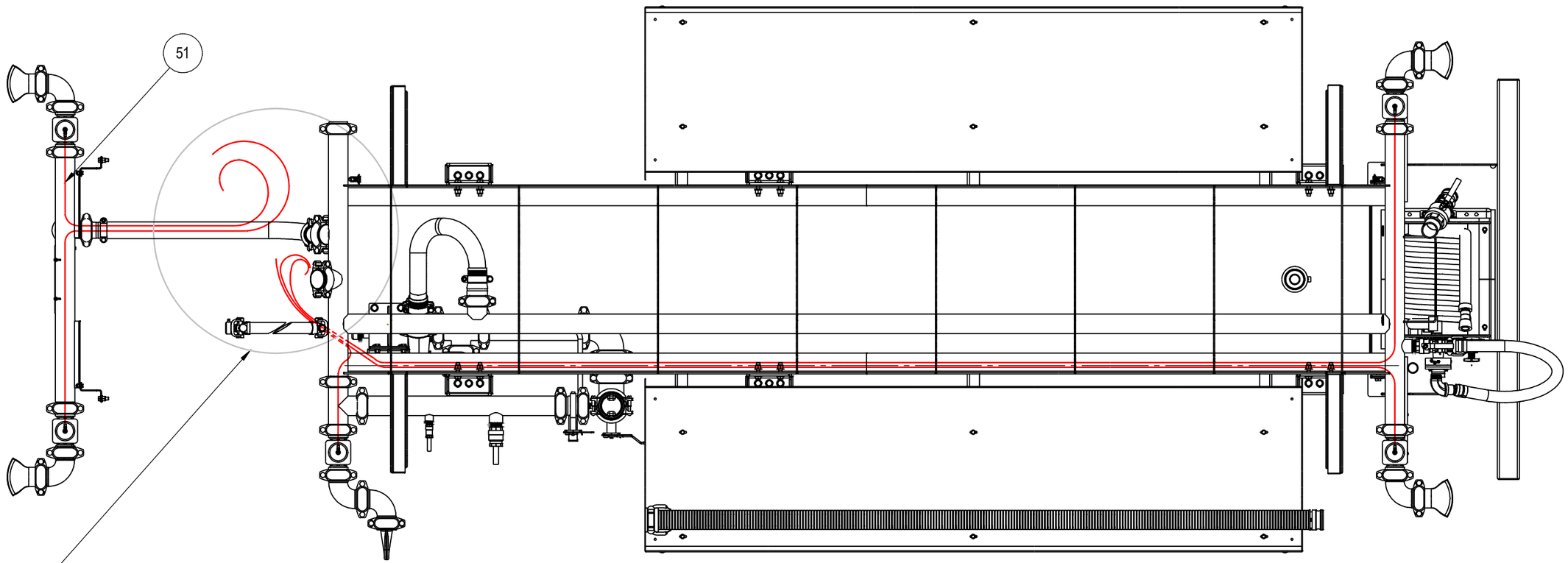

RUN LINES THROUGH THE BOTTOM OF THE CAB INTO THE CONTROL SWITCHES.
NOTE: DIFFERENT CHASSIS MODELS MAY HAVE DIFFERENT SWITCH LOCATIONS.
ENTER THE CAB AT THE BEST LOCATION FOR THE SWITCH LAYOUT THAT DOES
NOT REQUIRE ANY SPLICING..

1/4" AIR LINE DIAGRAM
SECTION L-L
SCALE 1 : 20

CONTROLLED DOCUMENT

ENGINEER:	
DATE:	

PROPRIETARY AND CONFIDENTIAL

THE INFORMATION CONTAINED IN THISDRAWING IS THE SOLE PROPERTY OF CURRY SUPPLY COMPANY. ANY REPRODUCTION IN PART OR AS A WHOLEWITHOUT THE WRITTEN PERMISSION OF CURRY SUPPLY COMPANY IS PROHIBITED.

JOB NUMBER	
DRAWING NO.	
QUANTITY	
CUSTOMER	
DESIGN STATUS	
THICKNESS	
UNITS	in
APPLICATION	

UNLESS OTHERWISE SPECIFIED:

DIMENSIONS ARE IN INCHES
TOLERANCES:
FRACTIONAL ±1/8"
ANGULAR: MACH ± BEND ±1
TWO PLACE DECIMAL ±.01
THREE PLACE DECIMAL ±.005

INTERPRET GEOMETRIC TOLERANCING PER:

MATERIAL
ASM

Process

DO NOT SCALE DRAWING

	NAME	DATE
MODEL BY:	MLC	09/17/19
DRAWN BY:	MLC	09/17/19
ENG APPR.		
MFG APPR.		
Q.A.		

COMMENTS:

Curry Supply Co

TITLE: WATER TANK, 4,000 GAL.
GEN IV - AIR LINE DIAGRAM

SIZE	PART NO.	REV
B	1815-1000	0

SHEET 2 OF 5

ITEM NO.	QTY	PART NUMBER	DESCRIPTION
2	4	15107	3/8-16 x 1.25" GD 8 Bolt
3	8	33815	WASHER, 3/8" X 13/16" O.D., HARDENED
4	4	70109	BOLT, HEX HD, SS, 3/8-16 X 1-1/2", GR 18-8
5	4	37185	LOCK NUT, 3/8"-16, GR.8, ZINC
6	8	71017	WASHER, SS, 3/8" X 7/8" O.D., GR18-8
7	4	70862	LOCKNUT, HEX HD, SS, 3/8"-16, GR18-8
8	2	15209	BOLT, HEX HD, 1/2"-13 X 1-1/2", GR8
9	4	33817	WASHER, 1/2" X 1-1/16" O.D., HARDENED
10	2	37187	LOCKNUT, HEX HD, 1/2"-13, GR8
11	4	15313	BOLT, HEX HD, 5/8"-11 X 2-1/2", GR.8, ZINC
12	8	33819	WASHER, 5/8" X 1-5/16 O.D., HARDENED
13	4	37272	LOCKNUT, HEX HD, 5/8"-11, GR8
52	2	0134296	PLUG, 1/2", HEX, STEEL
53	1	44605K731	FITTING, PIPE, REDUCER, 3" MP - 1-1/2" FP, CAST STEEL

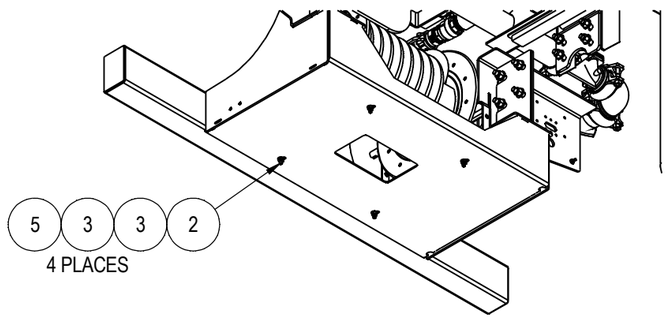

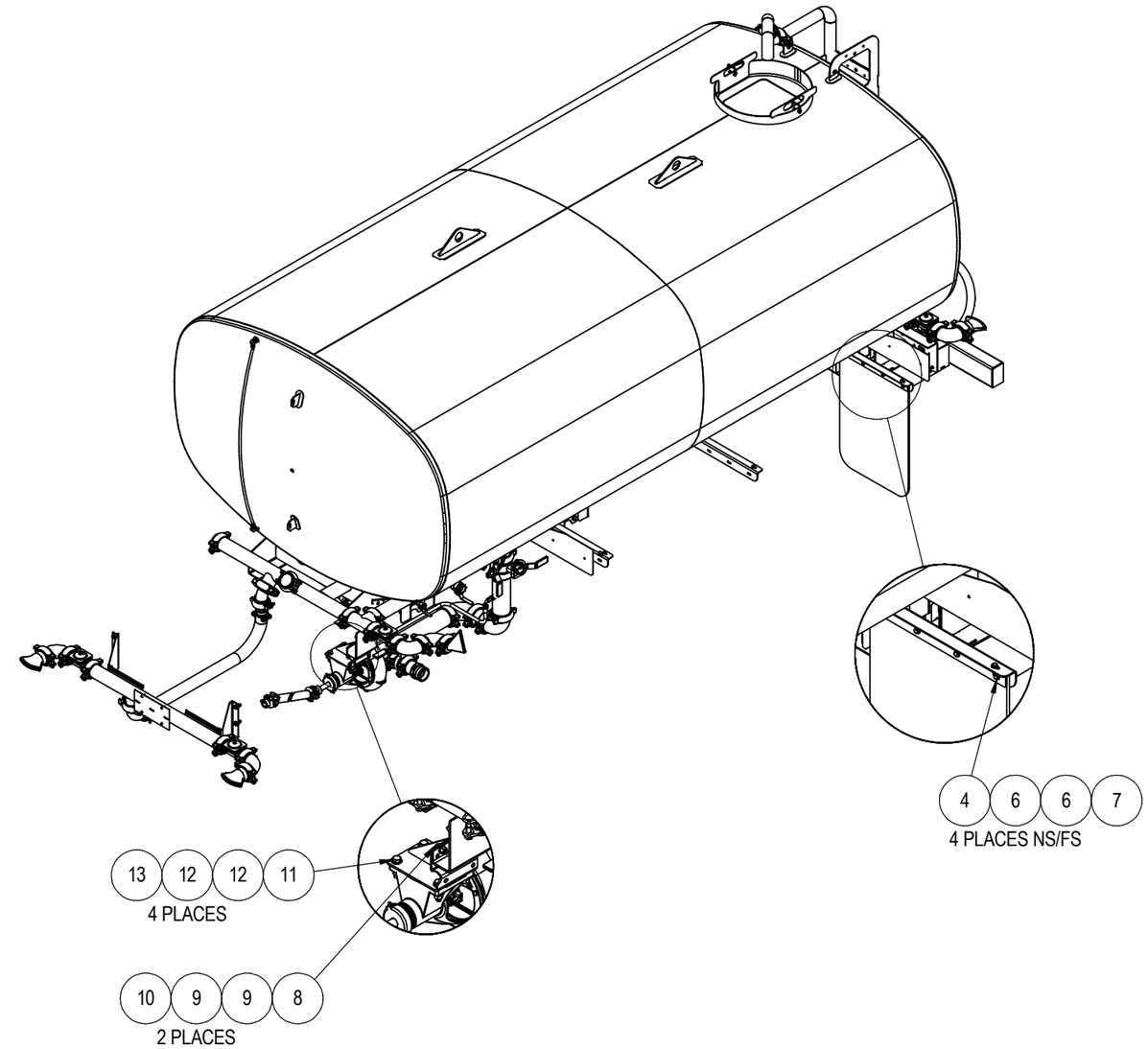

CONTROLLED DOCUMENT

ENGINEER:	
DATE:	

PROPRIETARY AND CONFIDENTIAL

THE INFORMATION CONTAINED IN THISDRAWING IS THE SOLE PROPERTY OF CURRY SUPPLY COMPANY. ANY REPRODUCTION IN PART OR AS A WHOLEWITHOUT THE WRITTEN PERMISSION OF CURRY SUPPLY COMPANY IS PROHIBITED.

JOB NUMBER	
PART NO	
QUANTITY	
CUSTOMER	
DESIGN STATUS	
THICKNESS	
UNITS	in
APPLICATION	

UNLESS OTHERWISE SPECIFIED:

DIMENSIONS ARE IN INCHES
TOLERANCES:
FRACTIONAL ±1/8"
ANGULAR: MACH ± BEND ±1
TWO PLACE DECIMAL ±.01
THREE PLACE DECIMAL ±.005

INTERPRET GEOMETRIC TOLERANCING PER:

MATERIAL
ASM

Process
A

DO NOT SCALE DRAWING

	NAME	DATE
MODEL BY:	MLC	9/17/19
DRAWN BY:	MLC	9/17/19
ENG APPR.		
MFG APPR.		
Q.A.		

COMMENTS:

Curry Supply Co

TITLE: WATER TANK, 4,000 GAL. GEN IV - BOLT LIST

SIZE	DRAWING NO.	REV
B	1815-1000	0

SCALE: 1:96 WEIGHT: 5727.9532 SHEET 3 OF 5

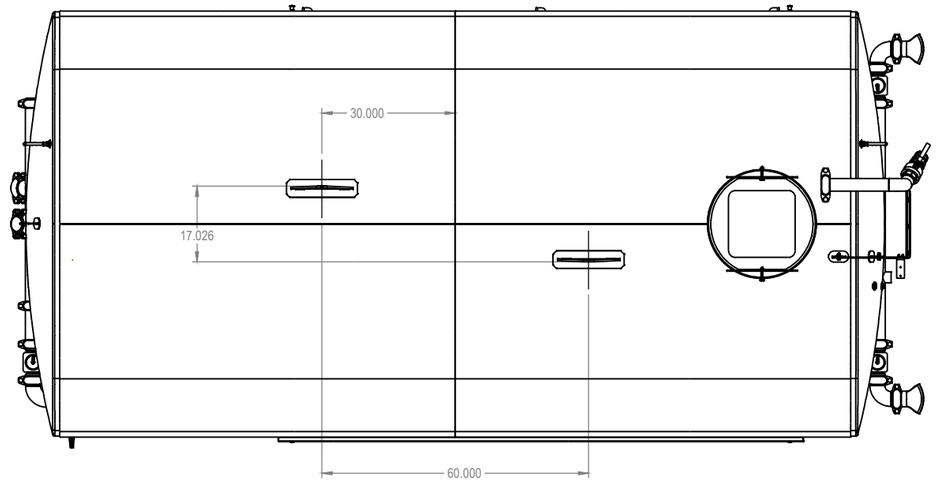

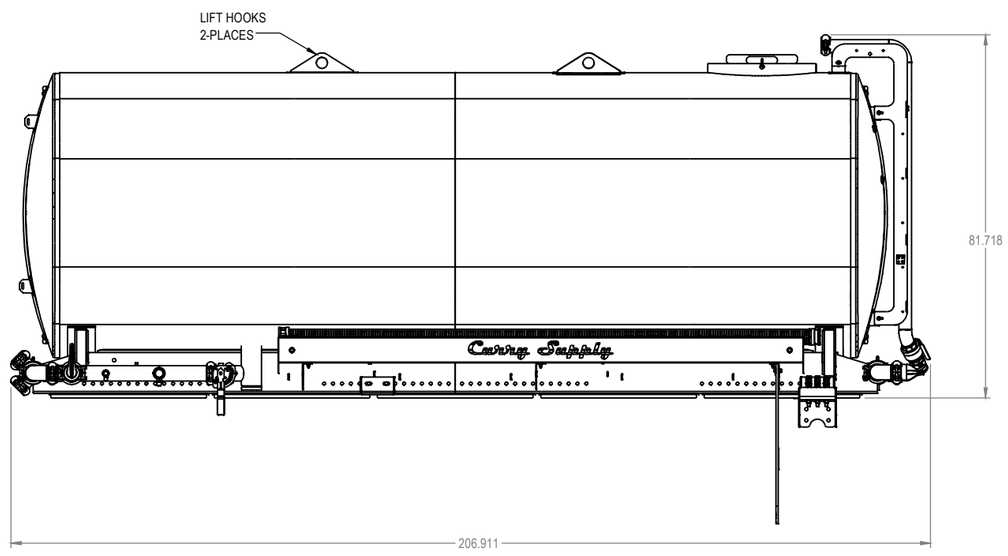

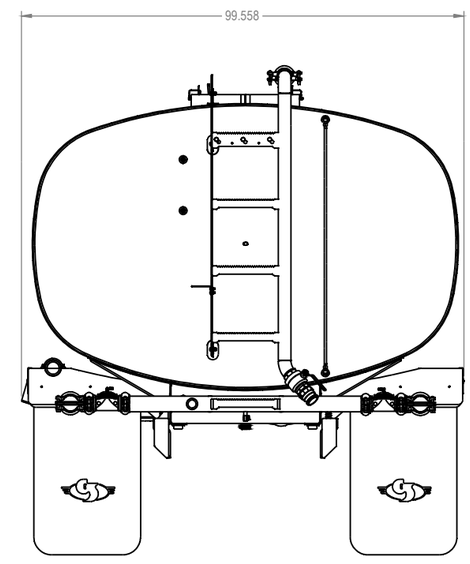

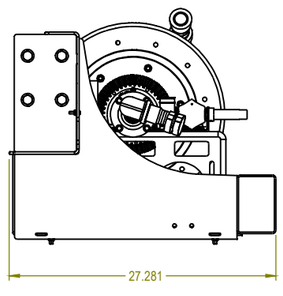

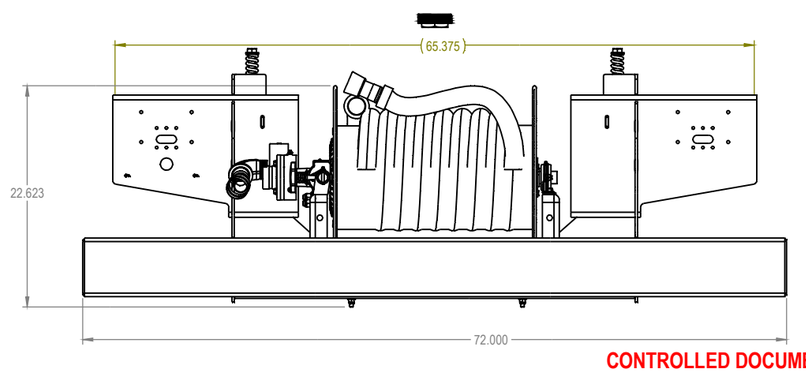

CONTROLLED DOCUMENT

ENGINEER:	
DATE:	

PROPRIETARY AND CONFIDENTIAL

THE INFORMATION CONTAINED IN THIS DRAWING IS THE SOLE PROPERTY OF CURRY SUPPLY COMPANY. ANY REPRODUCTION IN PART OR AS A WHOLEWITHOUT THE WRITTEN PERMISSION OF CURRY SUPPLY COMPANY IS PROHIBITED.

JOB NUMBER	
DRAWING NO.	
QUANTITY	
CUSTOMER	
DESIGN STATUS	
THICKNESS	
UNITS	in
APPLICATION	

UNLESS OTHERWISE SPECIFIED:

DIMENSIONS ARE IN INCHES
TOLERANCES:
FRACTIONAL ±1/8"
ANGULAR: MACH ± BEND ±1
TWO PLACE DECIMAL ±.01
THREE PLACE DECIMAL ±.005

INTERPRET GEOMETRIC TOLERANCING PER:

MATERIAL
ASM

Process

	NAME	DATE
MODEL BY:	MLC	09/17/19
DRAWN BY:	MLC	09/17/19
ENG APPR.		
MFG APPR.		
Q.A.		

COMMENTS:

Curry Supply Co

TITLE: WATER TANK, 4,000 GAL.
GEN IV - SHIPPING DIMENSIONS

SIZE	PART NO.	REV
C	1815-1000	0

SHEET 4 OF 5

(1) FOR A 2025 MACK MD WITHOUT THE PARK BRAKE BB PRESSURE SWITCH INSTALLED, LOCATE THE CONNECTOR ABOVE THE ACCELERATOR PEDAL AS SHOWN IN SHEET 2. ATTACH THE PARK BRAKE HOSE USING PART NUMBER BE13255 AND INSTALL THE NECESSARY WIRES AS INDICATED IN THE DIAGRAM.

(2) RUN MUNCIE BLUE WIRE INTO CAB AND ADD PART# 20864201 TO WIRE AND ADD IT TO TERMINAL 12 ON THE BACK OF THE SWITCH

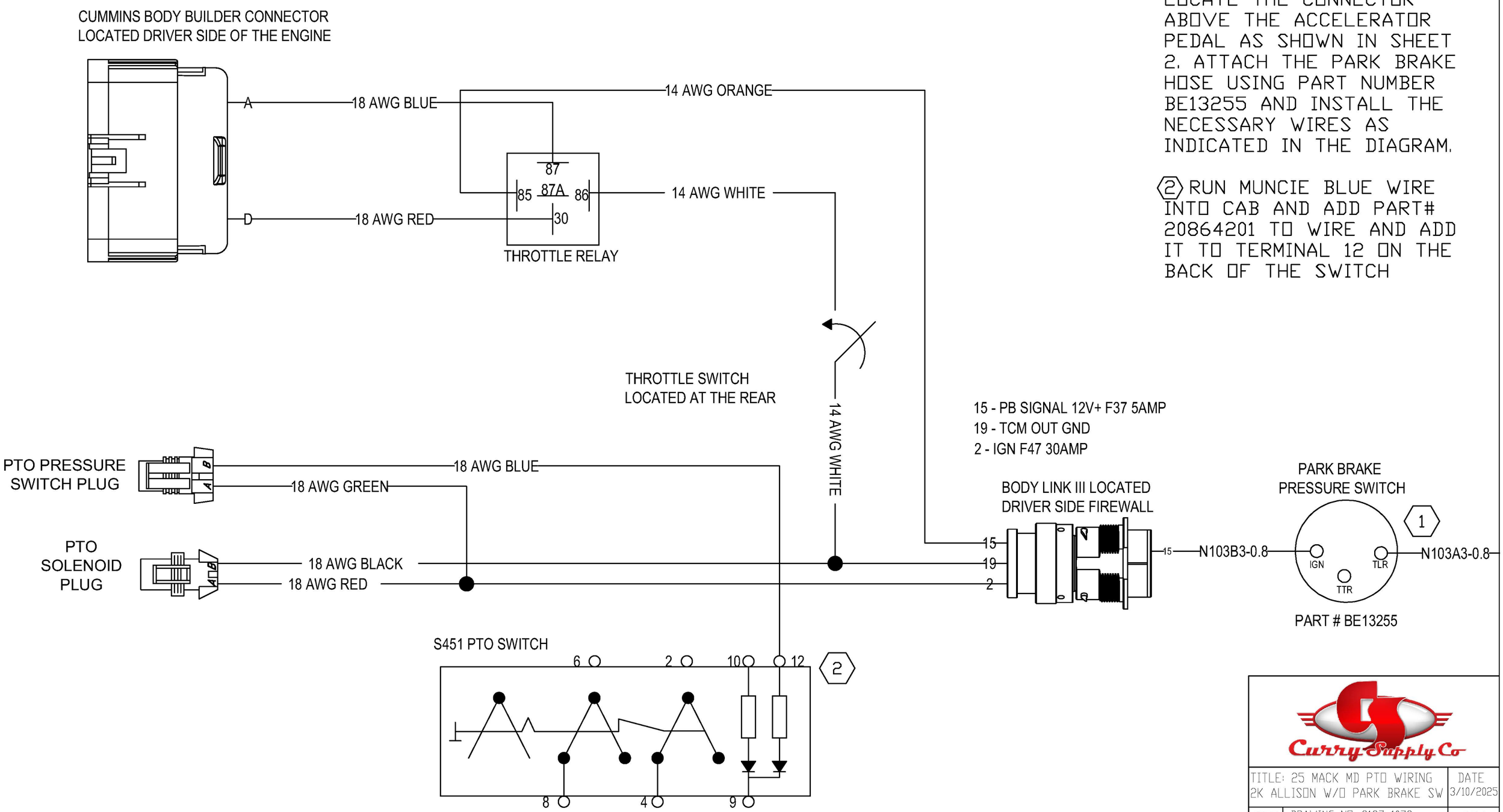

TITLE: 25 MACK MD PTO WIRING 2K ALLISON W/O PARK BRAKE SW		DATE 3/10/2025
SIZE: B	DRAWING NO. 2187-1073	REV 0
SCALE: NTS	DRAWN BY: JS	SHEET 1 OF 2

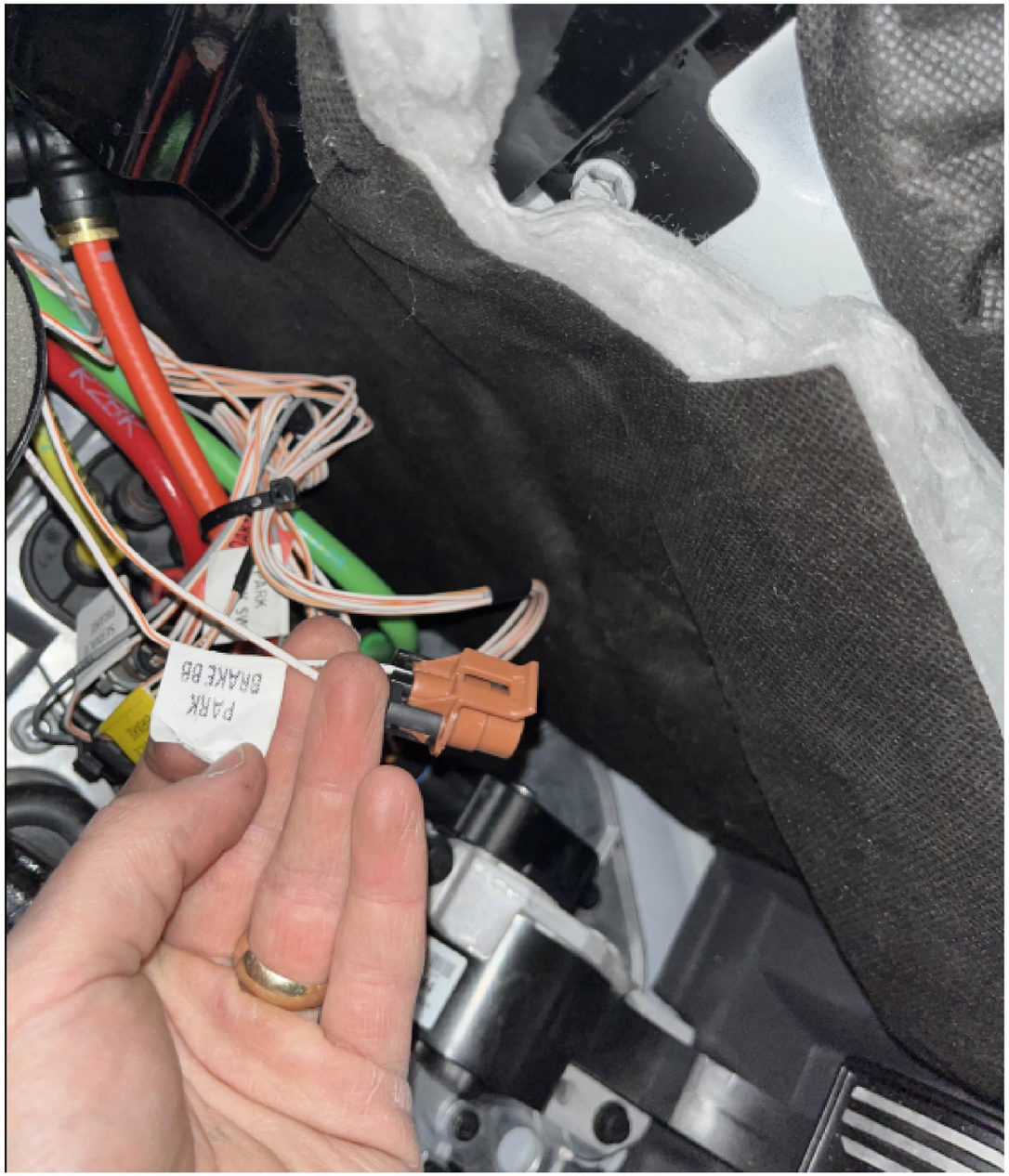

Curry Supply Co

TITLE: 25 MACK MD PTO WIRING 2K ALLISON W/O PARK BRAKE SW		DATE 3/10/2025
SIZE: B	DRAWING NO. 2187-1073	REV 0
SCALE: NTS	DRAWN BY: JS	SHEET 2 OF 2

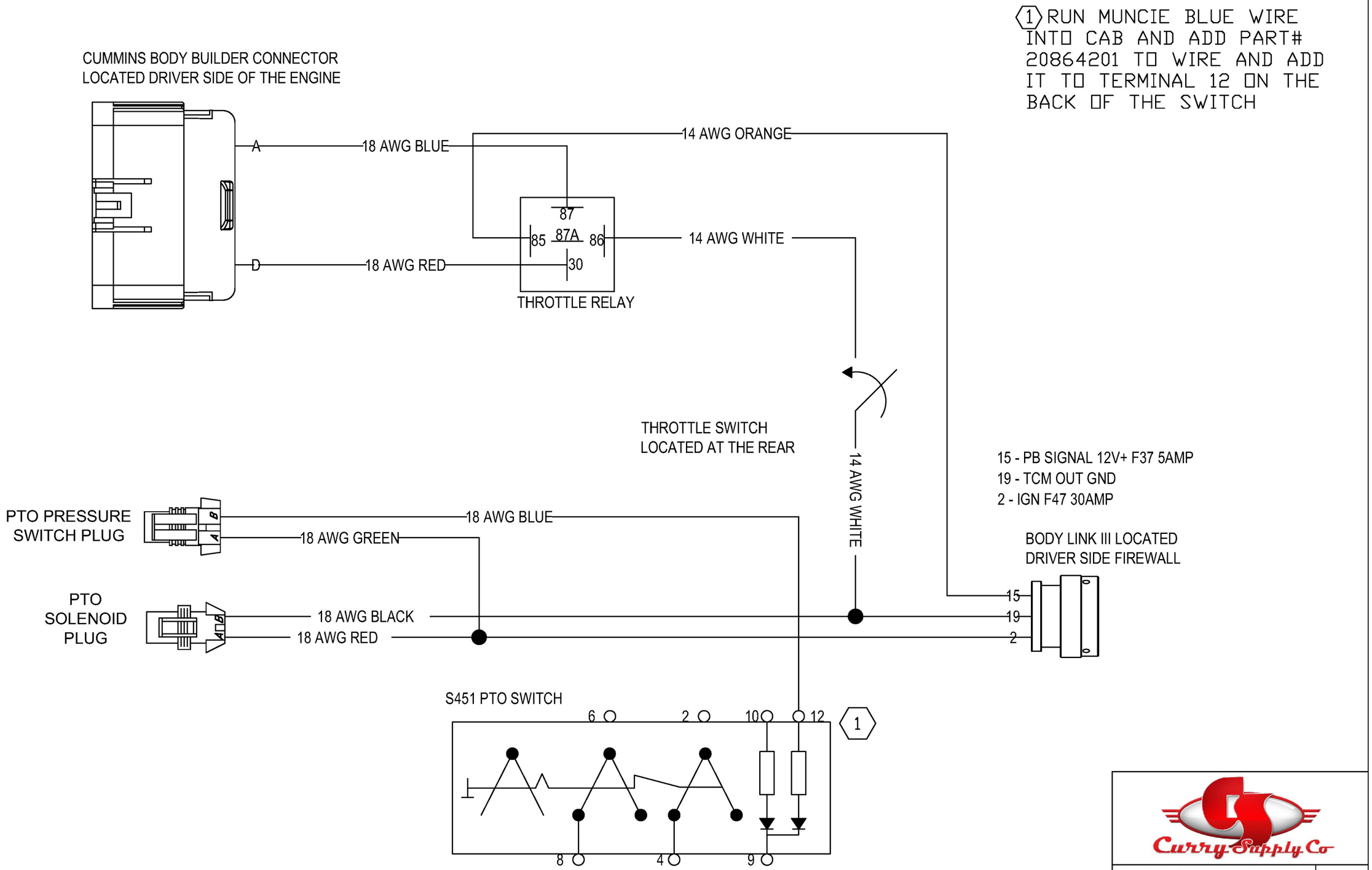

Curry Supply Co

TITLE: 25 MACK MD PTO WIRING 2K ALLISON W/ PARK BRAKE SW		DATE 3/10/2025
SIZE: B	DRAWING NO. 2187-1074	REV 0
SCALE: NTS	DRAWN BY: JS	SHEET 1 OF 1

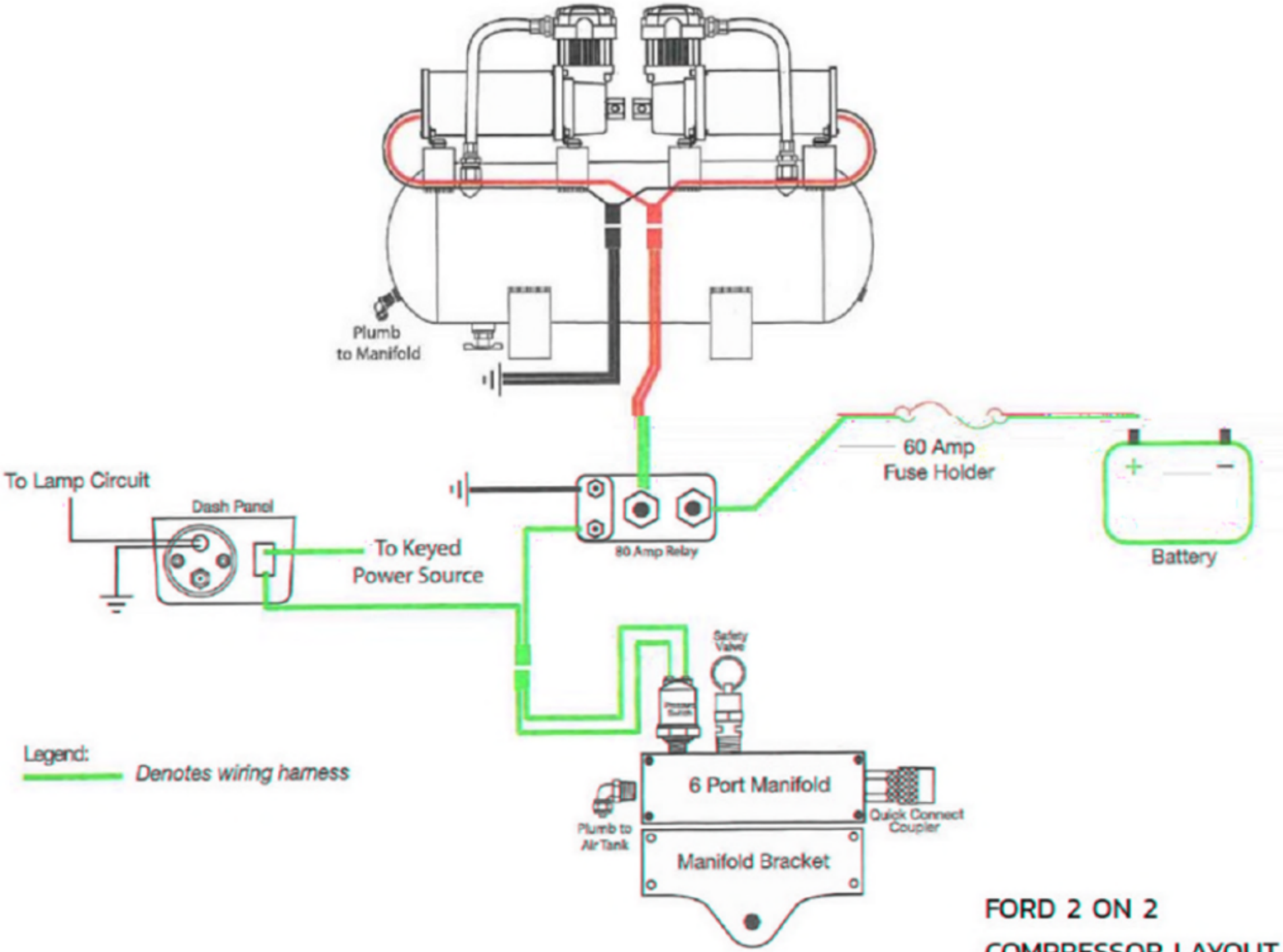

FORD 2 ON 2

COMPRESSOR LAYOUT

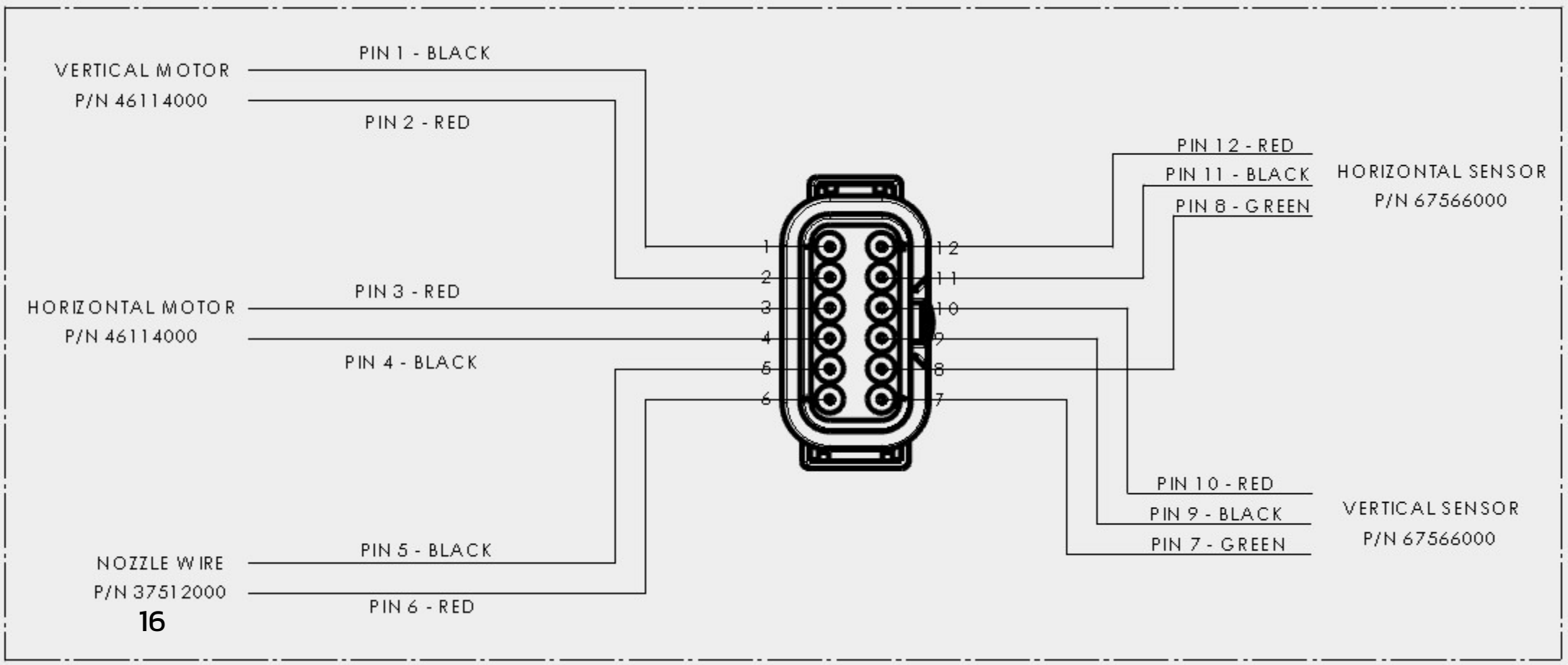
VERTICAL MOTOR
P/N 46114000
PIN 1 - BLACK
PIN 2 - RED
HORIZONTAL MOTOR
P/N 46114000
PIN 3 - RED
PIN 4 - BLACK
NOZZLE WIRE
P/N 37512000
PIN 5 - BLACK
PIN 6 - RED
1
2
3
4
5
6
12
11
10
9
8
7
PIN 12 - RED
PIN 11 - BLACK
PIN 8 - GREEN
HORIZONTAL SENSOR
P/N 67566000
PIN 10 - RED
PIN 9 - BLACK
PIN 7 - GREEN
VERTICAL SENSOR
P/N 67566000

REV.	ZONE	DESCRIPTION	BY	ECN NUMBER
REL		RELEASE TO PRODUCTION	KAP	161009

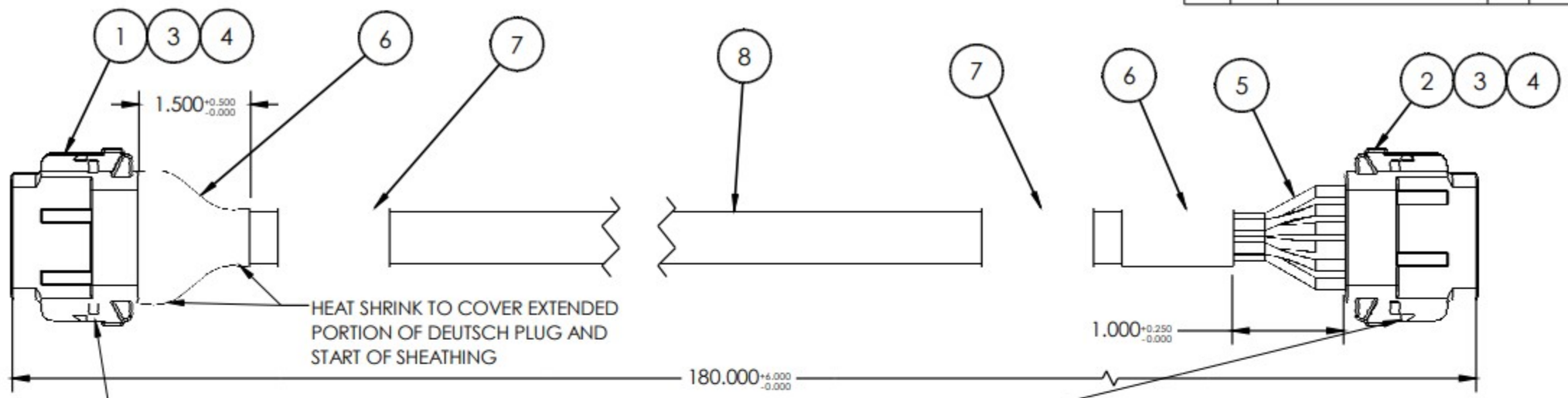

POSITION	WIRE COLOR	WIRE SIZE
1	RED	18 AWG
2	BLACK	18 AWG
3	BLUE	18 AWG
4	WHITE	18 AWG
5	ORANGE	18 AWG
6	GREEN	18 AWG
7	YELLOW	18 AWG
8	PURPLE	18 AWG
9	BROWN	18 AWG
10	RED/WHITE	18 AWG
11	BLACK/WHITE	18 AWG
12	BLUE/WHITE	18 AWG

POSITION	WIRE COLOR	WIRE SIZE
1	RED	18 AWG
2	BLACK	18 AWG
3	BLUE	18 AWG
4	WHITE	18 AWG
5	ORANGE	18 AWG
6	GREEN	18 AWG
7	YELLOW	18 AWG
8	PURPLE	18 AWG
9	BROWN	18 AWG
10	RED/WHITE	18 AWG
11	BLACK/WHITE	18 AWG
12	BLUE/WHITE	18 AWG

NOTES:

1) HARNESS IS TO ACT AS AN EXTENSION OR JUMPER WIRE. DEUTSCH PLUGS SHOULD BE WIRED 1 TO 1, 2 TO 2, ETC.

2) HARNESS TO BE APPROXIMATELY 15 FT IN LENGTH.

3) WIRE/INSULATION DIAMETER TO BE BETWEEN 0.053" AND 0.120".

4) HARNESS MANUFACTURER TO ENSURE THERE ARE NO OPENS, CROSSES, OR SHORTS FOR EACH CIRCUIT. A VERIFYING INSPECTION SHEET TO BE PROVIDED FOR EACH SHIPMENT. ALL CRIMPS SHALL COMPLY WITH TERMINAL MANUFACTURER'S GUIDLINES.

ITEM NO.	PN	DESCRIPTION	QTY.
8		SLEEVING - EXPANDABLE, BLACK BRAIDED	AS REQ'D
7		IDENTIFICATION LABEL - MANUFACTURER, MFG DATE, P/N, REV	2
6		ADHESIVE LINED HEAT SHRINK, UV STABLE, RATED -40F TO +185F	AS REQ'D
5		SXL WIRE CU, 18-AWG HIGH TEMP 125°C, VARIOUS COLORS	AS REQ'D
4		DEUTSCH LOCK, WM-12S	2
3		SOLID CRIMP SOCKET CONTACT, DEUTSCH #0462-201-20141	24
2		DEUTSCH DTM06-12SC (DEUTSCH PLUG, C KEY, GREEN)	1
1		DEUTSCH DTM06-12SB-E007 (EXTENDED DEUTSCH PLUG, B KEY, BLACK)	1

ELKHART BRASS MFG. CO., INC.
#1302 West Beardsley Ave,Elkhart, IN 46514, USA
This print and all data contained here on is the sole and exclusive property of Elkhart Brass Mfg. Co., INC., and will not be disclosed to others without the consent of Elkhart Brass Mfg. Co., INC. This print must be returned to Elkhart Brass Mfg. Co., INC. if requested.
Copyright© 2012 by Elkhart Brass Mfg. Co., INC.

DRAWN BY: KAP — DATE: 11/21/2016
CHECKED BY — DATE

MATERIAL: SEE NOTES FOR MATERIAL

WEIGHT (LBS): 0.03

CAT.NO.: 8100 HD

TOLERANCE UNLESS OTHERWISE SPECIFIED	
3 PLACE DEC.	± .010"
4 PLACE DEC.	± .005"
ANGLES	± 0°30' 0"

UNLESS OTHERWISE SPECIFIED DIMENSIONS ARE IN INCHES
SURFACE FINISH
REMOVE BURRS AND SHARP CORNERS
DO NOT SCALE PRINT
INTERPRET DIMENSIONS AND TOLERANCES PER ASME Y14.5M 1994
CAD MODEL: 37522000

THIRD ANGLE PROJECTION

ELKHART BRASS
Fire Fighting Equipment

DESCRIPTION: HARNESS - MODULE / MONITOR (15FT)

SIZE	PART NUMBER	REV.
B	37522000	REL

CAD SCALE 1:1 — SHEET 1 OF 1

37522000 REV. REL

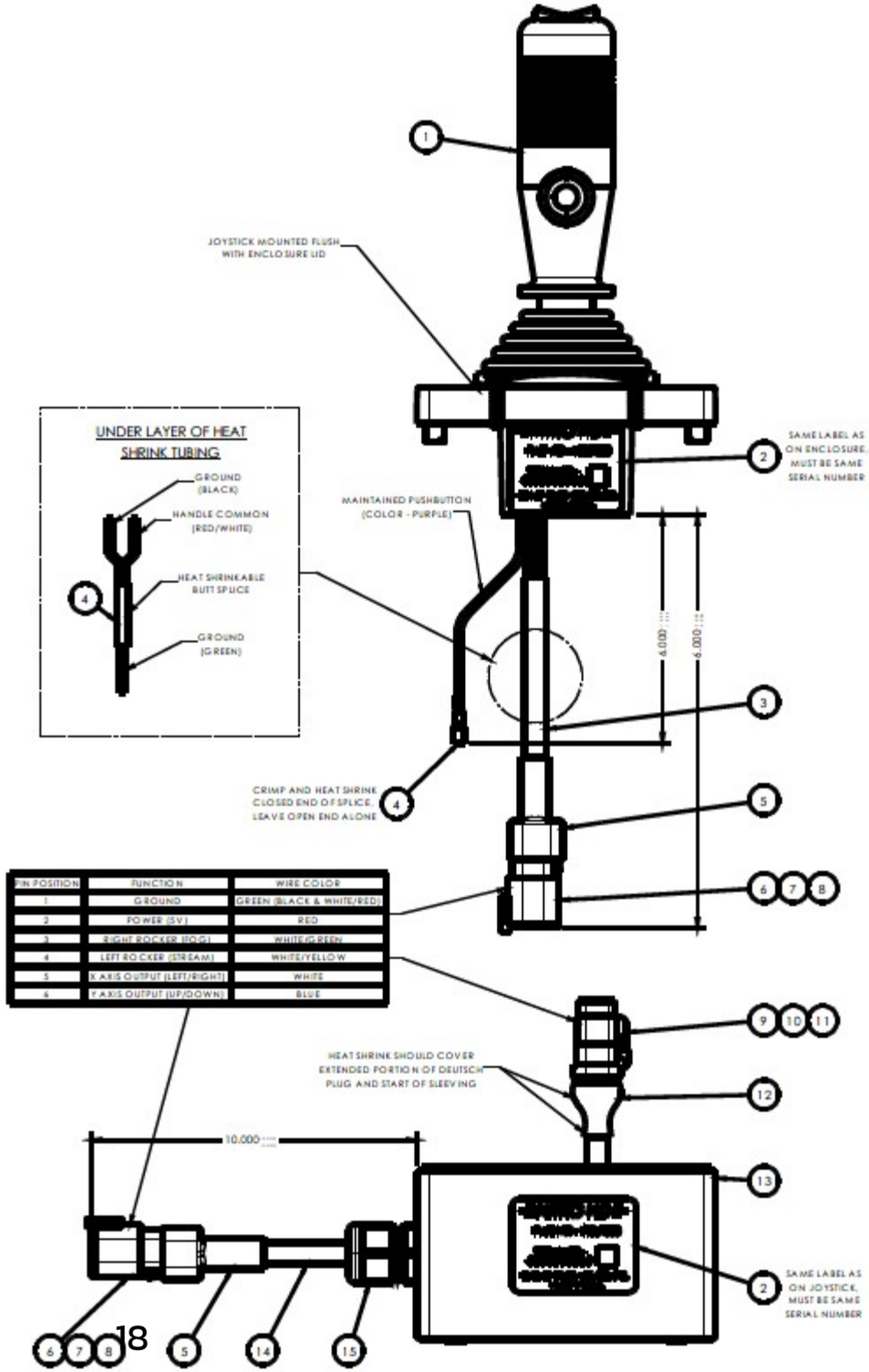

PIN POSITION	FUNCTION	WIRE COLOR
1	GROUND	GREEN (BLACK & WHITE/RED)
2	POWER (5V)	RED
3	RIGHT ROCKER (TOG)	WHITE/GREEN
4	LEFT ROCKER (STREAM)	WHITE/YELLOW
5	X AXIS OUTPUT (LEFT/RIGHT)	WHITE
6	Y AXIS OUTPUT (UP/DOWN)	BLUE

TOP VIEW -
JOYSTICK MOUNTING HOLES,
OVERALL ENCLOSURE DIMENSIONS

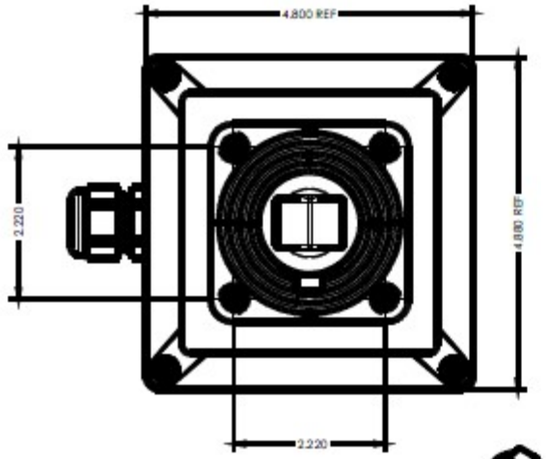

BOTTOM VIEW -
ENCLOSURE MOUNTING HOLES

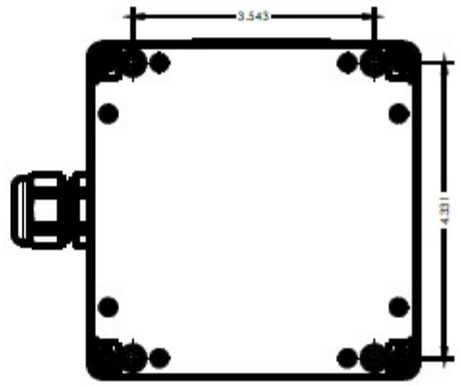

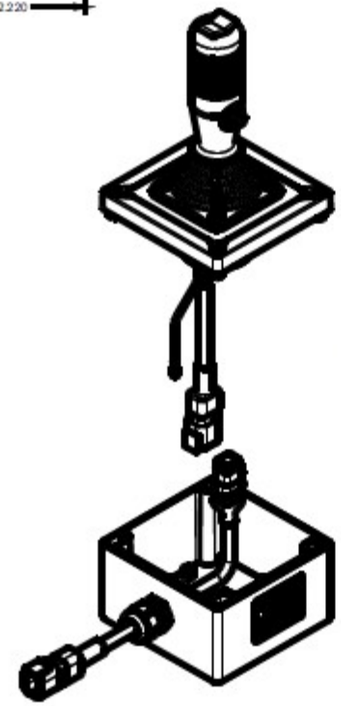

OREINT JOYSTICK HANDLE, LABELS, AND HARNESS AS SHOWN HERE:

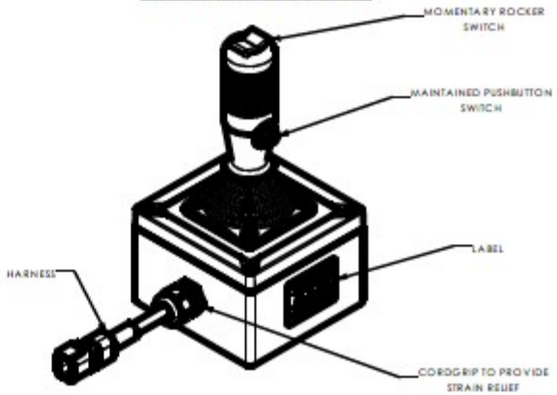

NOTES:

1) PURCHASE FROM OEM CONTROLS.

2) JOYSTICK TO BE SENT TO ELKHART BRASS WITH LID ATTACHED TO BOX.

3) A LABEL SHOULD BE PLACED ON THE ENCLOSURE AND ON THE JOYSTICK AS SHOWN. THESE LABELS SHOULD BE IDENTICAL, WITH THE SAME SERIAL NUMBER. LABELS TO BE PROVIDED BY ELKHART BRASS TO OEM CONTROLS.

4) ALL INDIVIDUAL WIRES SHOULD HAVE A DIAMETER BETWEEN 0.053" AND 0.120" ACCORDING TO DEUTSCH CONNECTOR SEAL REQUIREMENT.

ITEM NO.	PART NO.	DESCRIPTION	QTY.
15		HEYCO LIQUID TIGHT CORDGRIP, SERIES 35, PART #3448	1
14		EXPANDABLE BLACK BRAIDED SLEEVE	AS REQ'D
13		POLYCASE ENCLOSURE - SG-12 (4.88" X 4.8" X 3.35") GRAY, W/ ASSOCIATED SELF TAPPING SCREWS (QTY - 4)	1
12		ADHESIVE LINED HEAT SHRINK	AS REQ'D
11		DEUTSCH SOCKET - 0462-201-20141	6
10		DEUTSCH WEDGE LOCK - WM6S	1
9		DEUTSCH PLUG - DTM06-6S-E007 (EXTENDED PLUG, A KEY, GRAY)	1
8		DEUTSCH PIN - 0460-202-20141	12
7		DEUTSH WEDGE LOCK - WM-6P	2
6		DEUTSCH RECEPTACLE - DTM04-6P (A KEY, GRAY)	2
5		DEUTSCH BOOT - DTM6P-BT, GRAY	2
4		BUTT SPLICE - 18 AWG SIZE, HEAT SHRINKABLE, ADHESIVE LINED	2
3		NON ADHESIVE LINED HEAT SHRINK	AS REQ'D
2		LABEL - NITRO HD	2
1		OEM CONTROLS - HJ57 JOYSTICK, TOP MOMENTARY ROCKER, FRONT MAINTAINED PUSHBUTTON, W/ ASSOCIATED M4 SCREWS (QTY - 4)	1

ELKHART BRASS
Fire Fighting Equipment

MATERIAL

1.4

8100 HD

DESCRIPTION: JOYSTICK - ELECTRIC (NITRO HD)

SIZE: D | PART NUMBER: 41067000 | REV: A

CAD SCALE: 1:1 | SHEET: 2 of 2

41067000 REV. A

8100HD (Nitro HD) position sensor testing information

The position sensor used for controlling Vertical and Horizontal travel on the 8100HD (Nitro HD) is p/n 67566000.

- The sensors RED wire should have +5 volts on it.
- The sensors BLACK wire should be GROUND.
- The sensors GREEN wire should have;
  - Around +2.5v when no magnet is detected.
  - It should drop below +2.5 volts (around +1.5v) when detecting the North Pole of a magnet (RIGHT or UP).
  - It should go above +2.5 volts (around +3.5v) when detecting the South Pole of a magnet (LEFT or DOWN).

The magnets used on the 8100HD (Nitro HD) are p/n 46057000 and are positioned as follows.

- North Pole facing out for RIGHT and UP limits.
- South Pole facing out for LEFT and DOWN limits.

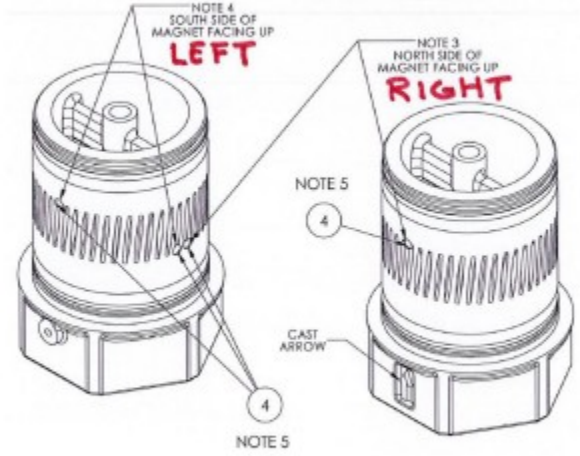

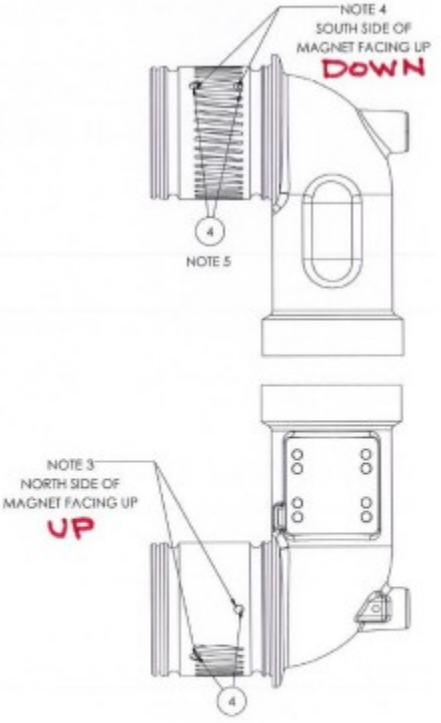

HATZ 3H50T Actuator Locations

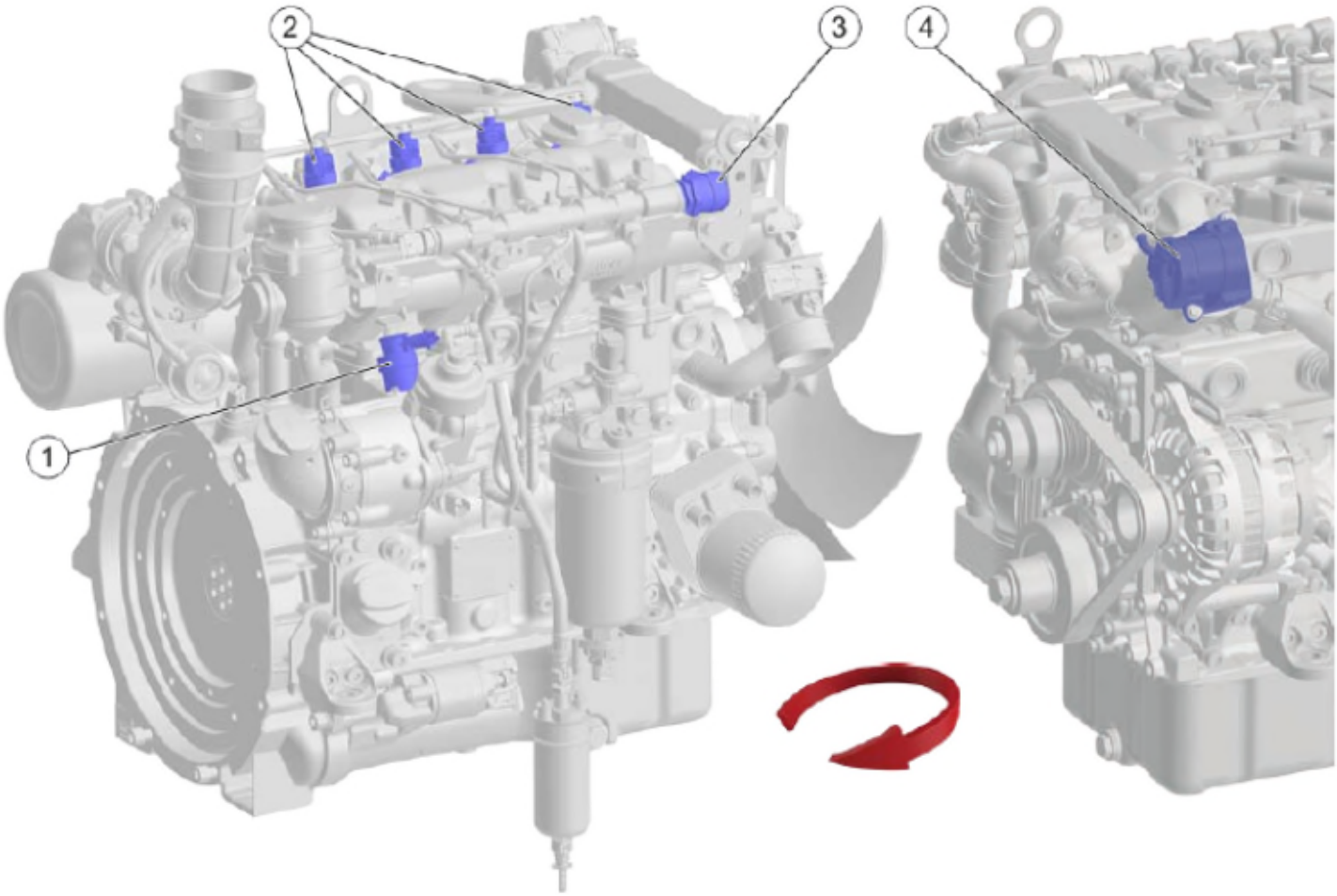

1. Metering unit on the high-pressure pump
2. Injectors
3. Rail pressure control valve
4. EGR valve

HATZ 3H50T Sensor Locations

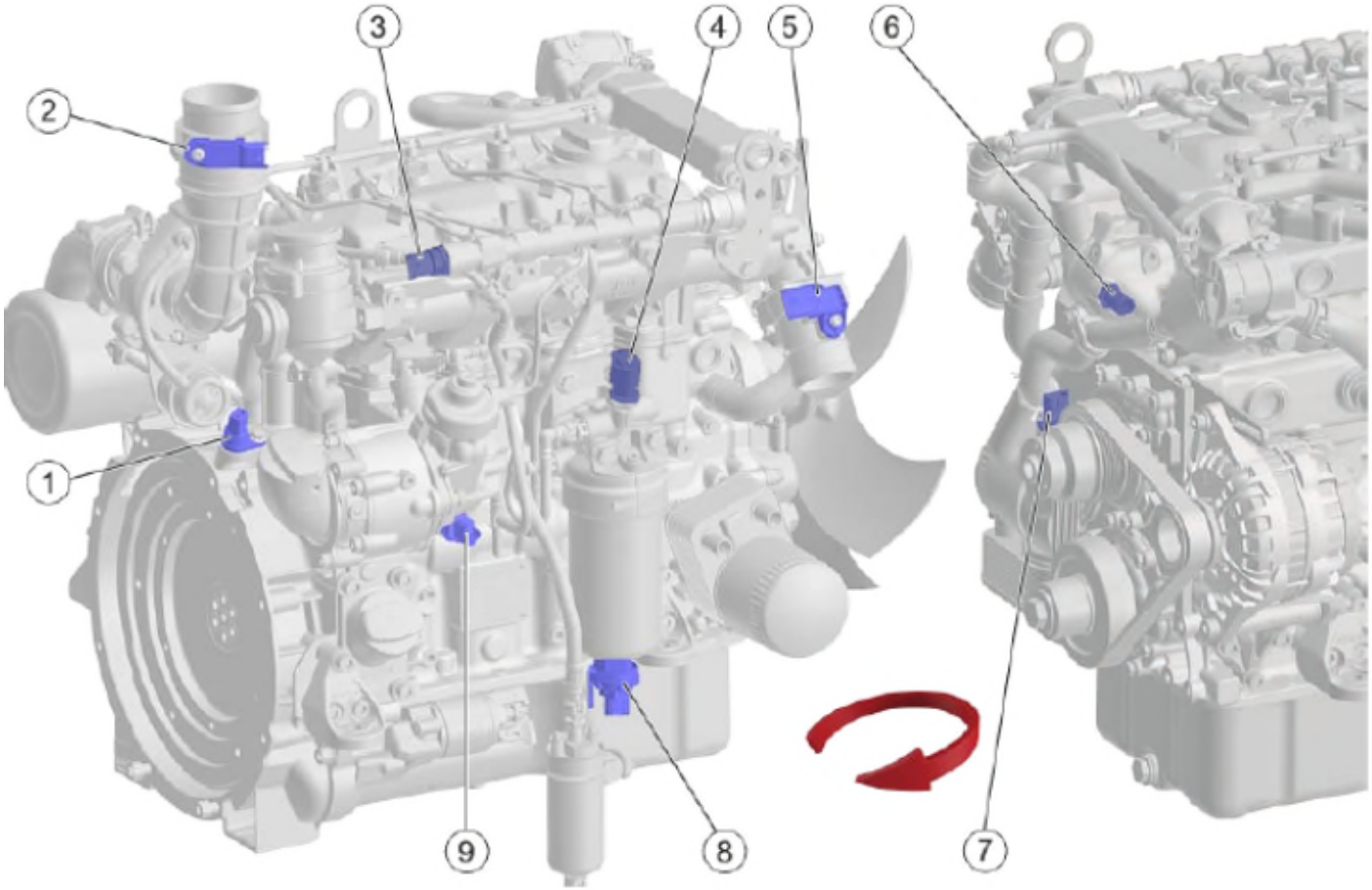

1. Crankshaft speed sensor
2. Air filter differential pressure sensor
3. Rail pressure sensor
4. Fuel low pressure and fuel temperature sensor
5. Charge air pressure and charge air temperature sensor (T/TI/TIC)
6. Coolant temperature sensor
7. Camshaft sensor
8. Water in fuel sensor
9. Oil pressure and oil temperature sensor

HATZ 3H50T Sensor Locations

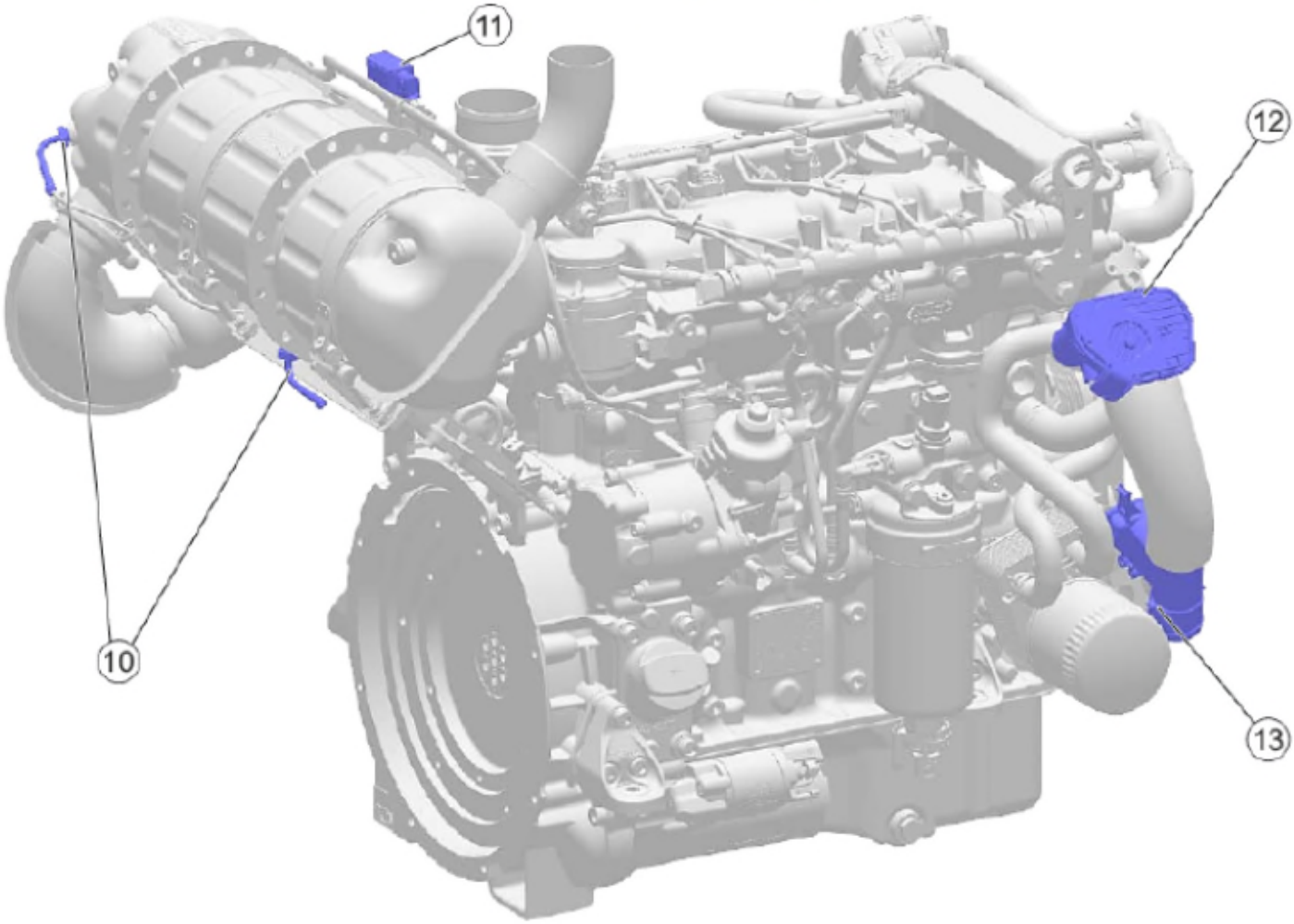

10. Exhaust temperature sensors (TICD)
11. Differential pressure sensor (TICD)
12. Intake throttle (TICD)
13. Air mass meter (TICD)

HATZ 3H50T Sensor Locations

14. Ambient pressure sensor (integrated in the engine control unit)
15. Coolant level sensor (with external expansion tank)
16. Coolant level sensor (OPU cooler)

Paßmaß	Abmaße
– –	+ 0.000
– –	– 0.000

HATZ Werknorm	
Bauteilsauberkeit	95234400-X
Material Compliance	FB700
Hatz-Standard - Wiring harness	953253xx

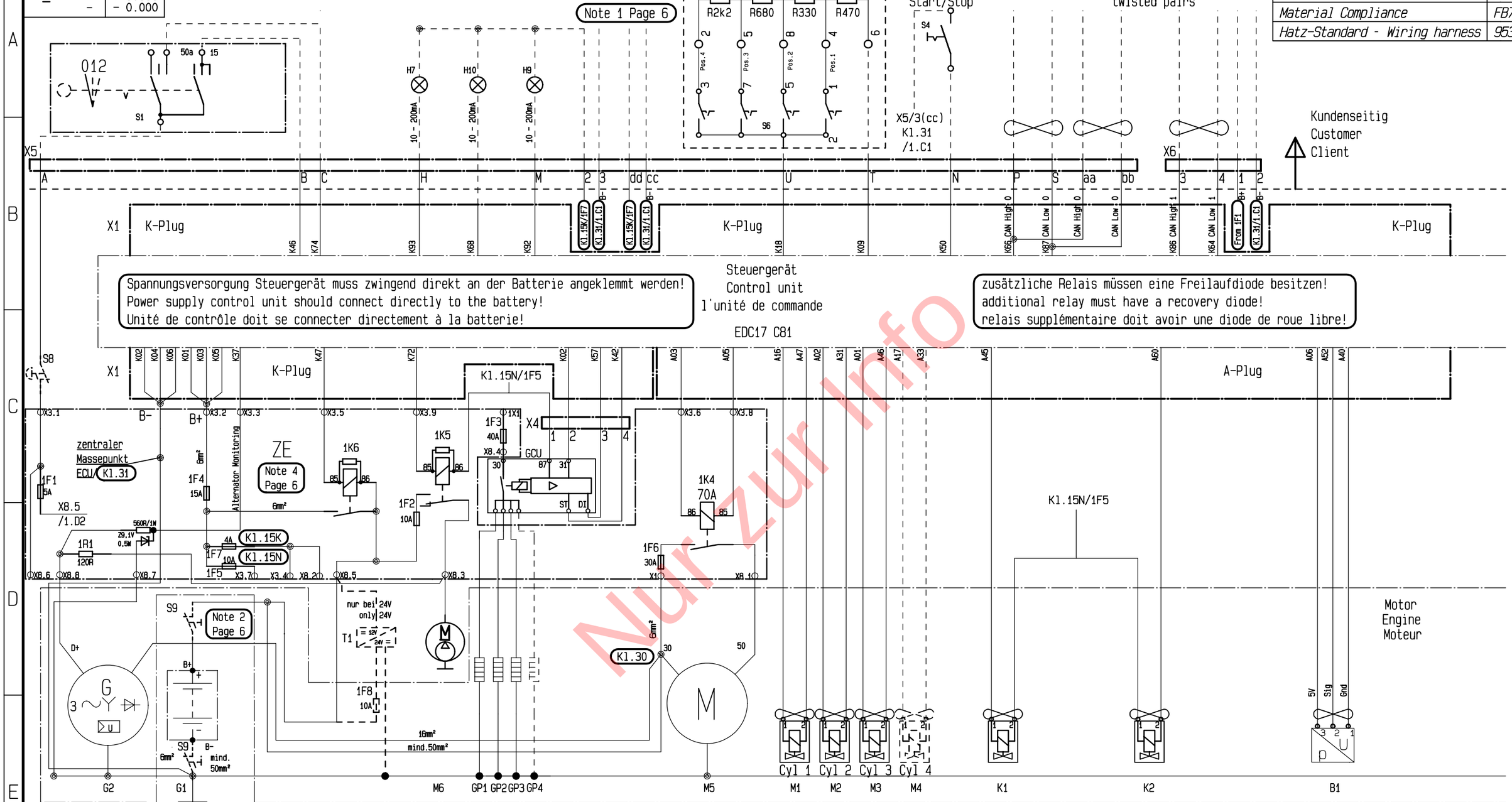

Stromversorgung / Ladeeinrichtung
Power supply / Charging device
Alimentation electr. / Chargeur

Kraftstoffpumpe
Fuel pump
Pompe à carburant

Vorglühen
Preheating
Prechauffage

Starteinrichtung
Starting device
Dispos. de demarr.

Injektoren
Injectors
Injecteurs

Note 3
Page 6

Druckregelventil
Rail pressure control valve
clapet de surpression de rampe d'injection

Hochdruckpumpe mit Zumesseinheit
High pressure pump & metering unit
Pompe à haute pression avec l'unité de dosage

Raildrucksensor
Rail pressure sensor
capteur de pression de rampe d'injetion

Achtung:Gewährleistungsverlust bei Veränderung der Schaltung oder Verdrahtung ohne Rücksprache mit dem Werk! - Warning: Loss of warranty when changing the circuit or wiring without consulting the factory!
Attention : Annulation de la garantie en cas de modification du circuit ou câblage sans consultation au préalable auprès de l'usine!

T15/K46 darf ausschließlich als Signaleingang für "Zündung Ein" am Steuergerät verwendet werden! - T15/K46 has to be used only for the input signal "ignition on" on the control unit!
T15/K46 doit seulement être utilisé comme une entrée de signal pour "contact allumé" sur l'unité de commande!

Anz	Nr.	Datum	Name	Änderung
	00	21.10.22	CR	H.22/081

NICHT MANUELL ÄNDERN

Oberflächenbeschaffenheit
SURFACE ROUGHNESS
DIN EN ISO 1302 Reihe 2

Werkstückkanten DIN ISO 13715
EDGES OF WORKING PARTS

Allgemeintoleranzen
GENERAL TOLERANCES
DIN ISO 2768 - m

Form- u. Lagetolerierung
GEOMETRICAL TOLERANCING
DIN ISO 1101

Schutzvermerk
PROTECTION MARK
nach/ACC. TO DIN ISO 16016

HATZ DIESEL
MOTORENFABRIK HATZ RUHSTORF-ROTT

Stromlaufplan

12V/24V

3/4H50TICD C81

Maßstab/SCALE 1:1 (:)

ISO E

	CAD	Datum	Name
Gez.		21.10.22	CR
Gepr.		21.10.22	MO

Werkstoff/ MATERIAL Gewicht (kg):

Rohteil-Nr.: / RAW-PART No.
Blatt 1

Fertigteil Nr.:/FINISH-PART No. Typ ZF
05653211.1653

Gedruckt von zsm7090 am 25.04.2024

Nur zur Info

HATZ Werknorm	
Bauteilsauberkeit	95234400-X
Material Compliance	FB700
Hatz-Standard - Wiring harness	953253xx

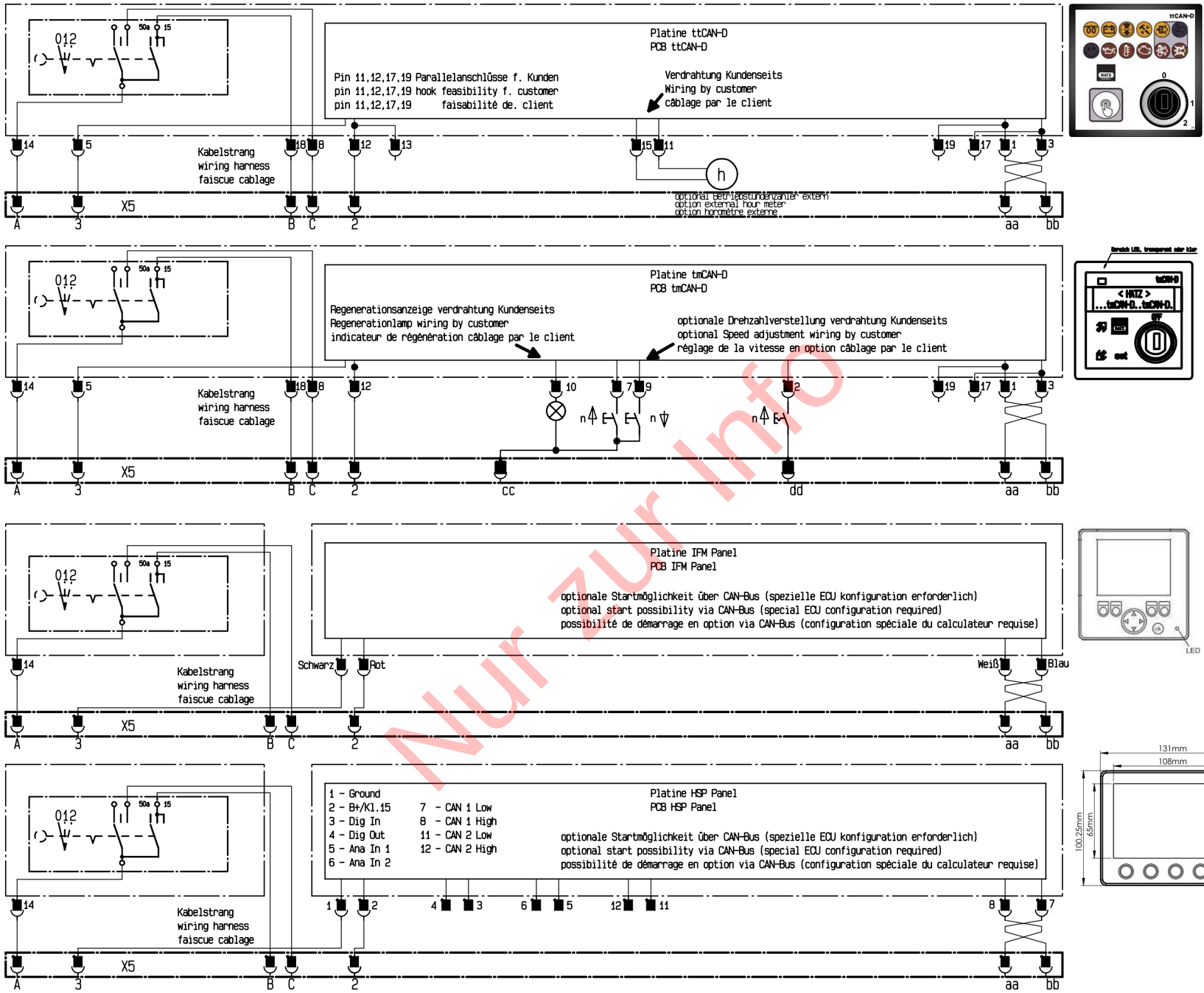

Achtung:Gewährleistungsverlust bei Veränderung der Schaltung oder Verdrahtung ohne Rücksprache mit dem Werk! - Warning: Loss of warranty when changing the circuit or wiring without consulting the factory!
Attention : Annulation de la garantie en cas de modification du circuit ou câblage sans consultation au préalable auprès de l'usine!

T15/K46 darf ausschließlich als Signaleingang für "Zündung Ein" am Steuergerät verwendet werden! - T15/K46 has to be used only for the input signal "ignition on" on the control unit!
T15/K46 doit seulement être utilisé comme une entrée de signal pour "contact allumé" sur l'unité de commande!

Anz	Nr.	Datum	Name	Änderung
1x	00	21.10.22	CR	H.22/081

NICHT MANUELL ÄNDERN

Oberflächenbeschaffenheit
SURFACE ROUGHNESS
DIN EN ISO 1302 Reihe 2

Werkstückkanten DIN ISO 13715
EDGES OF WORKING PARTS

Allgemeintoleranzen
GENERAL TOLERANCES
DIN ISO 2768 - m

Form- u. Lagetolerierung
GEOMETRICAL TOLERANCING
DIN ISO 1101

Schutzvermerk
PROTECTION MARK
nach/*ACC. TO* DIN ISO 16016

HATZ DIESEL
MOTORENFABRIK HATZ RUHSTORF-ROTT

Stromlaufplan
12V/24V
3/4H50TICD C81

Maßstab/SCALE 1:1 (:) ISO E

CAD	Datum	Name
Gez.	21.10.22	CR
Gepr.	21.10.22	MO

Werkstoff/ *MATERIAL* Gewicht (kg):

Rohteil-Nr.: / RAW-PART No.
BLATT 2

Fertigteil Nr.:/FINISH-PART No. Typ ZF
05653211.1653

Gedruckt von zsm7090 am 25.04.2024

Nur zur Info

Paßmaß	Abmaße
– –	+ 0.000
– –	– 0.000

HATZ Werknorm	
Bauteilsauberkeit	95234400-X
Material Compliance	FB700
Hatz-Standard - Wiring harness	953253xx

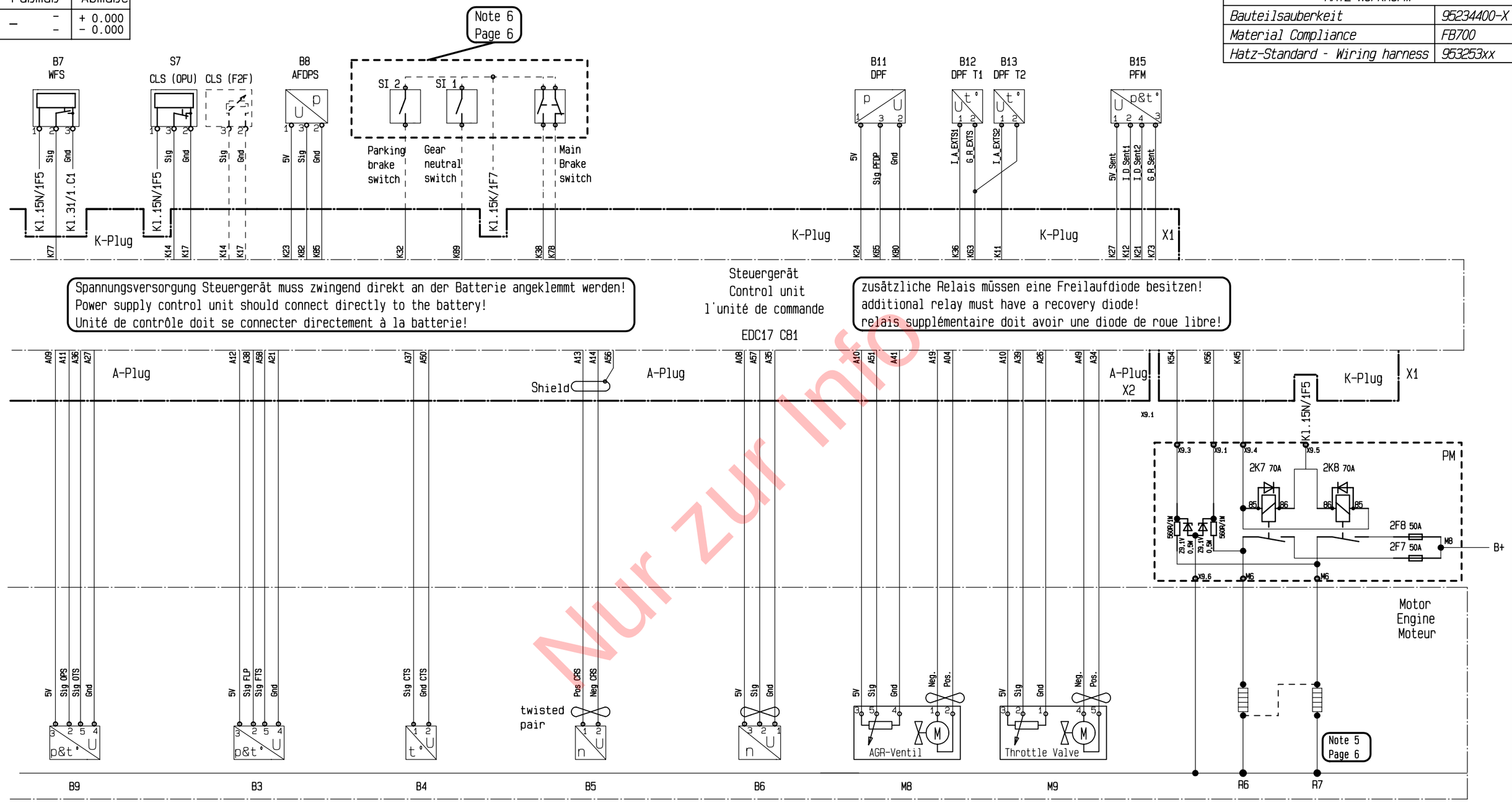

Spannungsversorgung Steuergerät muss zwingend direkt an der Batterie angeklemmt werden!
Power supply control unit should connect directly to the battery!
Unité de contrôle doit se connecter directement à la batterie!

zusätzliche Relais müssen eine Freilaufdiode besitzen!
additional relay must have a recovery diode!
relais supplémentaire doit avoir une diode de roue libre!

Öldruck-und Temp. Sensor Oil pressure & temp. sensor Pression d'huile et le capteur de température	Kraftstoff Niederduck & Temp. Sensor Fuel low pressure & temp. sensor Capteur et la température de combustible à basse pression	Kühlmitteltemp. Sensor Coolant temp. sensor Capteur de température de liquide de refroidissement	Kurbelwellen-Drehzahlsensor Crankshaft speed sensor Capteur de vitesse de vilebrequin	Nockenwellen-Drehzahlsensor Camshaft speed sensor Capteur de vitesse de l'arbre à cames	AGR Ventil EGR valve Soupape de recirculation des gaz d'échappement	Drosselklappe Throttle Valve Vanne d'étranglement	Abgasnachbehandlung exhaust gas aftertreatment post-traitement des gaz d'échappement

Achtung:Gewährleistungsverlust bei Veränderung der Schaltung oder Verdrahtung ohne Rücksprache mit dem Werk! - Warning: Loss of warranty when changing the circuit or wiring without consulting the factory!
Attention : Annulation de la garantie en cas de modification du circuit ou câblage sans consultation au préalable auprès de l'usine!

T15/K46 darf ausschließlich als Signaleingang für "Zündung Ein" am Steuergerät verwendet werden! - T15/K46 has to be used only for the input signal "ignition on" on the control unit!
T15/K46 doit seulement être utilisé comme une entrée de signal pour "contact allumé" sur l'unité de commande!

Anz	Nr.	Datum	Name	Änderung
	00	21.10.22	CR	H.22/081

NICHT MANUELL ÄNDERN

Oberflächenbeschaffenheit *SURFACE ROUGHNESS* DIN EN ISO 1302 Reihe 2
Werkstückkanten DIN ISO 13715 *EDGES OF WORKING PARTS*
Allgemeintoleranzen *GENERAL TOLERANCES* DIN ISO 2768 - m
Form- u. Lagetolerierung *GEOMETRICAL TOLERANCING* DIN ISO 1101
Schutzvermerk *PROTECTION MARK* nach/*ACC. TO* DIN ISO 16016

HATZ DIESEL
MOTORENFABRIK HATZ RUHSTORF-ROTT

Stromlaufplan
12V/24V
3/4H50TICD C81

Maßstab/SCALE 1:1 (:) ISO E

	CAD	Datum	Name
Gez.		21.10.22	CR
Gepr.		21.10.22	MO

Werkstoff/ *MATERIAL* Gewicht (kg):

Rohteil-Nr.: / RAW-PART No. B l a t t 3

Fertigteil Nr.:/FINISH-PART No. Typ ZF 0 5 6 5 3 2 1 1 . 1 6 5 3

Gedruckt von zsm7090 am 25.04.2024

Nur zur Info

HATZ Werknorm	
Bauteilsauberkeit	95234400-X
Material Compliance	FB700
Hatz-Standard - Wiring harness	953253xx

B1 Raildrucksensor
Railpressuresensor
Capteur pression rail
B2
B3 Kraftstoff Niederdruck & Temperatursensor
Fuel lowpressure & temp. sensor
Capteur température et basse pression carburant
B4 Kühlmitteltemperatursensor
Coolant temperature sensor
Capteur température liquide de refroidissement
B5 Kurbelwellendrehzahlsensor
Crankshaft speed sensor
Capteur régime vilebrequin
B6 Nockenwellendrehzahlsensor
Camshaft speed sensor
Capteur régime arbre à cames
B7 Wasser in Kraftstoffsensor
Water in fuel sensor
Capteur d'eau dans carburant
B8 Luftfilter Differenzdruck Sensor
Air cleaner differential pressure sensor
Capteur pression différence du filtre à air
B9 Öldruck-& Temperatursensor
Oil pressure & temp. sensor
Capteur température et pression d'huile
B10 Fahrzeug-Geschwindigkeitssensor (nur für Cruise control)
Vehicle speed sensor (only for cruise control)
Capteur vitesse du véhicule (seulement pour Cruise Control)
B11 Differenz Druck Sensor Dieselpartikelfilter
Differential pressure sensor Diesel particle filter
Capteur pression différence FAP
B12 DPF Abgastemperatursensor T1 Oxi-Cat Upstream
DPF Exhaust gas temperature sensor T1
FAP capteur température T1
B13 DPF Abgastemperatursensor T2 DPF Upstream
DPF Exhaust gas temperature sensor T2
FAP capteur température T2
B15 PFM Luftmassenstrommesser druckbasierend
PFM Pressure based air mass flow meter
PFM Débitmètre de masse d'air basé sur la pression
1F1 Sicherung T15 /T50 - ZE
Fuse T15/50 - ZE
Fusible T15/50 - ZE
1F2 Sicherung Kraftstoffpumpe - ZE
Fuse fuelpump - ZE
Fusible pompe d'alimentation carburant - ZE
1F3 Sicherung Glühkerzen - ZE
Fuse glow plugs - ZE
Fusible bougies de préchauffage - ZE
1F4 Sicherung Steuergerät B+ - ZE
Fuse control unit B+ - ZE
Fusible calculateur EDC17 B+ - ZE
1F5 Sicherung Zündung ein Klemme 15N - ZE
Fuse ignition on Pin 15N - ZE
Fusible pour Contact Borne 15N - ZE
1F6 Sicherung Starter 50 - ZE
Fuse starter 50 - ZE
Fusible démarreur 50 - ZE

1F7 Sicherung Zündung ein Klemme 15K Kunde - ZE
Fuse ignition on Pin 15K customer - ZE
Fusible pour Contact Borne 15K client - ZE
1F8 Sicherung Spannungswandler - ZE
Fuse DC/DC converter - ZE
Fusible pour les transformateurs de tension - ZE
2F7 Sicherung Abgasheizung 1 - PM
Fuse exhaust heater 1 - PM
Fusible d'échappement 1 - PM
2F8 Sicherung Abgasheizung 2 - PM
Fuse exhaust heater 2 - PM
Fusible d'échappement 2 - PM
G1 Starterbatterie
Starter battery
Batterie
G2 Drehstromgenerator
Battery charger
Alternateur triphasé
GCU Glühzeitsteuergerät
Glow control unit
Unité de contrôle systéme de préchauffage
GP1 Glühkerze 1
Glow plug 1
bougie de préchauffage 1
GP2 Glühkerze 2
Glow plug 2
bougie de préchauffage 2
GP3 Glühkerze 3
Glow plug 3
bougie de préchauffage 3
GP4 Glühkerze 4
Glow plug 4
bougie de préchauffage 4
H7 Motor läuft Anzeigelampe
Engine running lamp
Lampe témoin moteur en route
H9 Diagnoselampe
Diagnistic lamp
Lampe témoin de diagnostique
H10 Partikelfilterlampe
Particle filter lamp
Lampe à filtre à particules
K1 Druckregelventil
Rail pressure control valve
Clapet de surpression de rampe
K2 Hochdruckpumpe mit Zumesseinheit
High pressure pump & metering unit
Pompe à haute pression avec l'unité de dosage
1K4 Starter Relais
Starter relay
Relais démarreur

1K5 Relais für Kraftstoffförderpumpe - ZE
Fuelpump relay - ZE
Relais pompe d'alimentation carburant - ZE
1K6 Hauptrelais Steuergerät Ein - ZE
Mainrelay ECU On - ZE
Relais principal calculateur - ZE
2K7 Relais 1 zur Abgasheizung - PM
Relay 1 for exhaustheater - PM
Relais 2 pour chauffage par gaz d'échappement - PM
2K8 Relais 2 zur Abgasheizung - PM
Relay 2 for exhaustheater - PM
Relais 2 pour chauffage par gaz d'échappement - PM
M1 Injektor Zyl. 1
Injector Cyl. 1
Injecteur Cyl. 1
M2 Injektor Zyl. 2
Injector Cyl. 2
Injecteur Cyl. 2
M3 Injektor Zyl. 3
Injector Cyl. 3
Injecteur Cyl. 3
M4 Injektor Zyl. 4
Injector Cyl. 4
Injecteur Cyl. 4
M5 Anlasser
Starter motor
Démarreur
M6 Kraftstoffförderpumpe
Fuel pump
Pompe d'alimetation carburant
M8 AGR-Ventil
EGR-Valve
Vanne EGR
M9 Drosselklappe
Throttle Valve
Vanne d'étranglement
PM DPF Zusatzheizung Platine
DPF Power modul board
DPF Carte du module d'alimentation
R1 Widerstand zur Generatorerregung
Resistor for battery charger excitation
Résistance pour excitation alternateur
R6 Abgasheizung 1
Exhaust heater 1
chauffage des gaz d'échappement 1
R7 Abgasheizung 2
Exhaust heater 2
chauffage des gaz d'échappement 2

S1 Zündstartschalter
Ignition - start -switch
Clé de contact
S2 Diagnose Anforderungstaster
Diagnostic request switch
Interrupteur de demande de diagnostic
S4 Startschalter (optional) zu B-
Start switch (optional) to B-
Bouton Start (option) sur B-
S6 Schalter für Mehrfachdrehzahl (optional)
Multi state switch(optional)
Commutateur pour plusieurs vitesses (MSS)
S7 Kühlmittelstand Schalter
Coolant level switch
Capteur niveau liquide de refroidissement
S8 Not-Aus - Verdrahtung Kundenseits
Emergency stop - wiring customer side
Arrêt d'urgence - Câblage par le client
S9 Batteriehauptschalter
Battery Main Switch
Interrupteur principal de batterie
S10 Geschwindigkeitsregler
Cruise control
Régulateur de vitesse
S11 Bremsen Schalter (nur für cruise control)
Main break switch (only for cruise control)
Interrupteur frein à main (seulement pour Cruise Control)
SI1 Sicherheitseingang - Neutral-Gang-Schalter
Safety input - Gear neutral switch
entrée de sécurité - Interrupteur de vitesse neutre
SI2 Sicherheitseingang - Park-bremsen-schalter
Safety input - Parking brake switch
entrée de sécurité - Commutateur de frein de stationnement
T1 Gleichspannungswandler 24V/12V 20A
DC/DC Converter 24V/12V 20A
Convertisseur DC/DC 24V/12V 20A
ZE Zentralelektrik Platine
Central electric board
Tableau électrique central

Achtung:Gewährleistungsverlust bei Veränderung der Schaltung oder Verdrahtung ohne Rücksprache mit dem Werk!
Warning: Loss of warranty when changing the circuit or wiring without consulting the factory!
Attention : Perte de garantie en cas de changement du circuit ou câblage sans consulter l'usine!

T15/K46 darf ausschließlich als Signaleingang für "Zündung Ein" am Steuergerät verwendet werden!
T15/K46 has to be used only for the input signal "ignition on" on the control unit!
T15 / K46 doit être utilisé uniquement pour le signal d'entrée « Contact allumer » sur l'unité de commande!

Nach Zündung aus hat K1.15 einen Nachlauf von 20 Sek..
After ignition off K1.15 is delayed for 20 sec..
Après coupure du contact, K1.15 est retardée pendant 20 secondes.

Nur zur Info

Anz	Nr.	Datum	Name	Änderung
	00	21.10.22	CR	H.22/081

NICHT MANUELL ÄNDERN

Oberflächenbeschaffenheit
SURFACE ROUGHNESS
DIN EN ISO 1302 Reihe 2

Werkstückkanten DIN ISO 13715
EDGES OF WORKING PARTS

Allgemeintoleranzen
GENERAL TOLERANCES
DIN ISO 2768 - m

Form- u. Lagetolerierung
GEOMETRICAL TOLERANCING
DIN ISO 1101

Schutzvermerk
PROTECTION MARK
nach/*ACC. TO* DIN ISO 16016

HATZ DIESEL
MOTORENFABRIK HATZ RUHSTORF-ROTT

Stromlaufplan
12V/24V
3/4H50TICD C81

Maßstab/SCALE 1:1 (:)	CAD	Datum	Name
ISO E	Gez.	21.10.22	CR
	Gepr.	21.10.22	MO

Werkstoff/ *MATERIAL* Gewicht (kg):

Rohteil-Nr.: / RAW-PART No.
B l a t t 4

Fertigteil Nr.:/FINISH-PART No. Typ ZF
0 5 6 5 3 2 1 1 . 1 6 5 3

Gedruckt von zsm7090 am 25.04.2024

HATZ Werknorm	
Bauteilsauberkeit	95234400-X
Material Compliance	FB700
Hatz-Standard - Wiring harness	953253xx

X5

Nr.	Description	Assignment	Label
1			
2	Zündung Ein Kl. 15 mit Nachlauf (KL.15K) ignition on clamp 15 with after run (KL.15K) Contact allumé borne 15 dépassement du temps (KL.15K)		
3	B- - Masse Ground B- - masse	vom Massepunkt from Ground de la masse	0
4			
A	B+ 5A Spannungsversorgung T15/50 B+ 5A power supply T15/50 B+ alimentation courant T15/50	von der Zentralelektrik from centralelectric du électrique central	1
B	Zündung Ein Klemme 15 ignition on clamp 15 Contact allumé borne 15	T15 - K46	15
C	Startsignal Klemme 50 startsignal clamp 50 Signal de démarrage borne 50	T50 - K74	50
H	Motor läuft Lampe engine running lamp Lampe témoin moteur en route	ERL - K93(Lowside)	ML
M	Diagnoselampe Lowside diagnostic lamp lowside Lampe témoin de diagnistic lowside	Dia - K90	DIA-

Nr.	Description	Assignment	
N	Motor Start Schalter engine start switch Interrupteur démarrage moteur	ENGSA - K50	
R			
T	Drehzahlwahlschalter multi state switch Commutateur pour plusieurs vitesse (MSS)	MSSRPM - K09	14
U	Masse MSSRPM ground MSSRPM Masse MSSRPM	GR-DIG - K18	0
P	CAN 0 High (Kunden-CAN) CAN 0 high (customer-CAN) CAN 0 High (CAN-client)	CAN H 0 - K66 - V11	CAN +
S	CAN 0 Low (Kunden-CAN) CAN 0 low (customer-CAN) CAN 0 Low (CAN-client)	CAN L 0 - K87 - V12	CAN-
aa	CAN 0 High (Kunden-CAN) CAN 0 high (customer-CAN) CAN 0 High (CAN-client)	CAN H 0 - K66 - V11	CAN +
bb	CAN 0 Low (Kunden-CAN) CAN 0 low (customer-CAN) CAN 0 Low (CAN-client)	CAN L 0 - K87 - V12	CAN-
cc	B-	0 vom Massepunkt 0 from ground 0 de la masse	0
dd	Kl. 15 mit Nachlauf (KL.15K) clamp 15 with after run (KL.15K) Contact allumé borne 15 dépassement du temps (KL.15K)		24
ee			
hh			

Achtung:Gewährleistungsverlust bei Veränderung der Schaltung oder Verdrahtung ohne Rücksprache mit dem Werk!
Warning: Loss of warranty when changing the circuit or wiring without consulting the factory!
Attention : Perte de garantie en cas de changement du circuit ou câblage sans consulter l'usine!

T15/K46 darf ausschließlich als Signaleingang für "Zündung Ein" am Steuergerät verwendet werden!
T15/K46 has to be used only for the input signal "ignition on" on the control unit!
T15 /K46 doit être utilisé uniquement pour le signal d'entrée « Contact allumer » sur l'unité de commande!

X1 Steuergerätestecker Kundenseitig
Control unit plug customer side
Connecteur calculateur côté client
X2 Steuergerätestecker Motorseitig
Control unit plug engine side
Connecteur calculateur côté moteur
X3 Stecker für Kraftstoffförderpumpenrelais und Hauptrelais
Plug for fuel pump relay and mainrelay
Connecteur pour pompe d'alimentation carburant et relais principal
X4 Stecker zu Glühzeitsteuergerät
Plug for glow control unit
Connecteur unité de contrôle système de préchauffage"
X5 Stecker für Kundensignale
Plug for customer signals
Connecteur signaux client
X6 CAN-Bus Diagnosestecker
Can bus diagnostic plug
Connecteur CAN-Bus diagnostique
X7 Stecker für Starterrelais
Plug for starterrelay
Connecteur pour relais de démarrage
1X1 B+ Anschluss an der Zentralelektrik
B+ connection on the central electric board
B+ connexion Tableau électrique central

GCU 24V (K3) Pin assignment

6-pol connector
1 - Glowplug 1
2 - not connect
3 - Glowplug 2
4 - Glowplug 3
5 - not connect
6 - Glowplug 4

4-pol connector
1 - ST(Control signal)
2 - 86(ignition on)
3 - DI(Diagnosis signal)
4 - 31(Ground)

Screw M6
B+ powersupply glow plugs

GCU 12V (K3) Pin assignment

1 - Glowplug 1
2 - Glowplug 2
3 - Glowplug 3
4 - Glowplug 4
5 - not connect
6 - 87(ignition on)
7 - 31(Ground)
8 - not connect
9 - DI(Diagnosis signal)
10 - ST(Control signal)
11 - power supply glow plugs

Klemme 15N und Kl.15K sind nach Zündung aus noch für ca. 20Sek. aktiv. (Nachlauf)
Terminal 15N and Kl.15K are still on for approx. 20 seconds after ignition off.(after run)
Les terminaux 15N et Kl.15K sont toujours allumés pendant env. 20 secondes après la coupure du contact. (après course)

X6-Can Bus 1 diagnostic plug
1 - B+ 5A
2 - B- (Ground)
3 - Can 1 high
4 - Can 1 low

Anz	Nr.	Datum	Name	Änderung
	00	21.10.22	CR	H.22/081

NICHT MANUELL ÄNDERN

Oberflächenbeschaffenheit *SURFACE ROUGHNESS* DIN EN ISO 1302 Reihe 2
Werkstückkanten DIN ISO 13715 *EDGES OF WORKING PARTS*
Allgemeintoleranzen *GENERAL TOLERANCES* DIN ISO 2768 - m
Form- u. Lagetolerierung *GEOMETRICAL TOLERANCING* DIN ISO 1101
Schutzvermerk *PROTECTION MARK* nach/*ACC. TO* DIN ISO 16016

HATZ DIESEL
MOTORENFABRIK HATZ RUHSTORF-ROTT

Stromlaufplan
12V/24V
3/4H50TICD C81

Maßstab/SCALE 1:1 (:) ISO E

	CAD	Datum	Name
Gez.		21.10.22	CR
Gepr.		21.10.22	MO

Werkstoff/ *MATERIAL* Gewicht (kg):

Rohteil-Nr.: / RAW-PART No. B|l|a|t|t| |5| | | | | |

Fertigteil Nr.:/FINISH-PART No. Typ ZF
0|5|6|5|3|2|1|1|.|1|6|5|3

Nur zum Info

Gedruckt von zsm7090 am 25.04.2024

HATZ Werknorm	
Bauteilsauberkeit	95234400-X
Material Compliance	FB700
Hatz-Standard - Wiring harness	953253xx

Note 1:
Spannungsversorgung für Kundensteuerung ca. 13V- 4A auch bei 24V Motoren.
Power supply for customer control approx 13V-4A also by 24V-Engines.
Alimentation pour commande client env. 13V-4A également avec moteurs 24V

Note 2:
Batterietrennschalter möglichst nah an der Batterie installieren.
Zuleitung Steuergerät muss auch durch den Trennschalter von der Batterie getrennt werden.
Der Trennschalter darf frühestens 1 Minute (Nachlauf) nach Motorstillstand betätigt werden.Sonst können elektrische Komponenten des Motors zerstört werden.
Der Motor kann und darf unter keinen Umständen durch den Batterietrennschalter abgestellt werden.
Battery disconnector install as close as possible to the battery.
The control unit supply line must be also disconnected from the battery.
The circuit breaker must not be opened until at least 1 minute (after-run) after the motor has stopped, otherwise electrical components of the motor can be destroyed.
The engine must not be switched off by the battery isolating switch during operation.
Installez l'interrupteur de batterie aussi près que possible de la batterie.
La ligne d'alimentation de l'unité de commande doit également être déconnectée de la batterie à l'aide du l'interrupteur de batterie.
L'interrupteur de batterie doit être actionné au moins 1 minute (dépassement) après l'arrêt du moteur, sinon les composants électriques du moteur peuvent être détruits.
En aucun cas, le moteur ne doit être arrêté à l'aide du coupe-batterie

Note 3:
M4 und GP4 nur bei 4H50TICD
M4 and GP4 only by 4H50TICD
M4 et GP4 seulement à 4H50TICD
T1 nur bei 3/4H50TICD 24V
T1 only by 3/4H50TICD 24V
T1 seulement à 3/4H50TICD 24V

Note 4:
ZE-X8.2 & X8.6 frei verfügbar
ZE-X8.2 & X8.6 freely available
ZE-X8.2 & X8.6 libre disposition

Note 5
Bei 24V System Glühkerzen in Reihe und nur Relais 2K7 und Rückmeldung K56 aktiv.
By 24V system Glowplugs in serial and Relay 2K7 and feedback K56 activ.
à 24V système bougies de préchauffage connectées en série et seulement relais 2K7 et Commentaires K56 actif

Note 6:
erforderlich für Anwendung mobile Maschine für Start und Regeneration
und für Stationärmotoren für Regeneration - Verdrahtung Kundenseits
required for application mobile machine for starting and regeneration
and for stationary engines for regeneration - wiring by customer
requis pour l'application machine mobile pour le démarrage et la régénération
et pour moteurs à l'arrêt pour la régénération - câblage par le client

Achtung:Gewährleistungsverlust bei Veränderung der Schaltung oder Verdrahtung ohne Rücksprache mit dem Werk!
Warning: Loss of warranty when changing the circuit or wiring without consulting the factory!
Attention : Perte de garantie en cas de changement du circuit ou câblage sans consulter l'usine!

T15/K46 darf ausschließlich als Signaleingang für "Zündung Ein" am Steuergerät verwendet werden!
T15/K46 has to be used only for the input signal "ignition on" on the control unit!
T15 /K46 doit être utilisé uniquement pour le signal d'entrée « Contact allumer » sur l'unité de commande!

Klemme 15N und Kl.15K sind nach Zündung aus noch für ca. 20Sek. aktiv. (Nachlauf)
Terminal 15N and Kl.15K are still on for approx. 20 seconds after ignition off.(after run)
Les terminaux 15N et Kl.15K sont toujours allumés pendant env. 20 secondes après la coupure du contact. (après course)

Nur zur Info

Anz	Nr.	Datum	Name	Änderung
	00	21.10.22	CR	H.22/081

NICHT MANUELL ÄNDERN

Oberflächenbeschaffenheit *SURFACE ROUGHNESS* DIN EN ISO 1302 Reihe 2
Werkstückkanten DIN ISO 13715 *EDGES OF WORKING PARTS*
Allgemeintoleranzen *GENERAL TOLERANCES* DIN ISO 2768 - m
Form- u. Lagetolerierung *GEOMETRICAL TOLERANCING* DIN ISO 1101
Schutzvermerk *PROTECTION MARK* nach/*ACC. TO* DIN ISO 16016

HATZ DIESEL
MOTORENFABRIK HATZ RUHSTORF-ROTT

Stromlaufplan
12V/24V
3/4H50TICD C81

Maßstab/SCALE 1:1 (:) ISO E

CAD	Datum	Name
Gez.	21.10.22	CR
Gepr.	21.10.22	MO

Werkstoff/ *MATERIAL* Gewicht (kg):

Rohteil-Nr.: / RAW-PART No. B|l|a|t|t| |6| | | | | |

Fertigteil Nr.:/FINISH-PART No. Typ ZF 0|5|6|5|3|2|1|1|.|1|6|5|3

Gedruckt von zsm7090 am 25.04.2024